▪ Gate valves ▪ Overpressure-safety-devices

If a closed gate valve filled with a medium (e.g. water) (fig. 80.1) is heated, an unacceptably high pressure may develop in the body. The level of increase in pressure that may occur depends upon the percentage volumes of the fluid and vapour phases and on the increase in the temperature of the medium. Overpressure in the body can adversely affect the operation of the gate valve. Moreover an unacceptably high pressure load can result in the failure of the pressure-retaining components.

Figure 80.2 shows the increase of pressure according to percentage volume and temperature changes, when water is in the body.

Attention: If there is a possibility of an unacceptable pressure load of this kind developing in the valve because of the way it has been fitted or the way it is used, the piping designer or operator must provide a suitable safety device.

Simple and effective protection against overpressure can be achieved by means of a hole in the seat ring or in the wedge on the side facing the pressure (Fig. 80.4). This hole prevents the pressure in the body from exceeding the operating pressure; however, the gate valve can then only provide a seal in one direction. If this is the case, the direction of flow is shown by an arrow on the body. Another possibility is to by-pass the third room (Fig. 80.5) to the side facing the pressure.

In case an outside overpressure safety device should be assigned body has to be ordered with an appropriate closed stud (Fig. 80.1 and 80.3).

Fig. 80.1

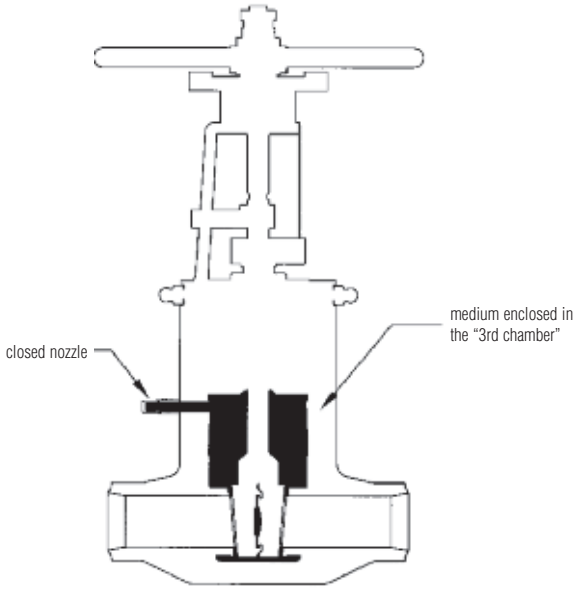

Fig. 80.2

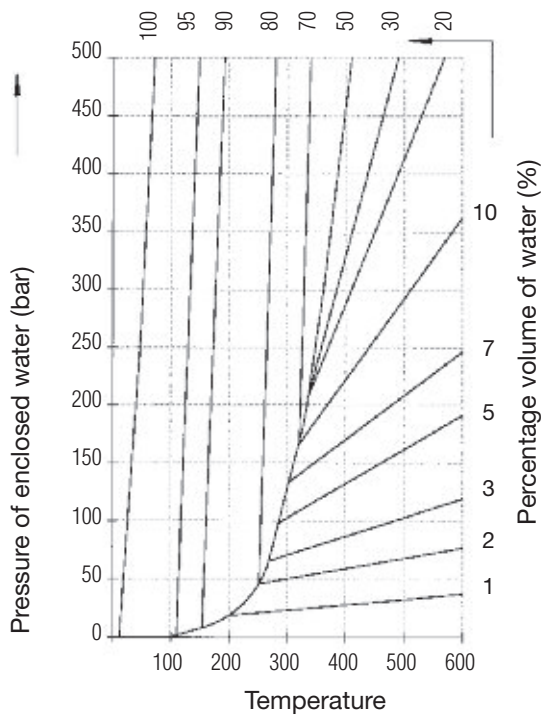

Abb. 80.3:
with safety valve

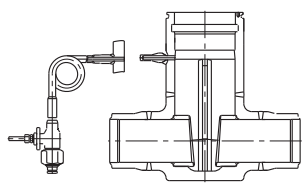

Abb. 80.4:
with hole in the wedge

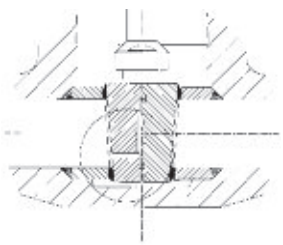

Abb. 80.5:
with hole in the seat ring

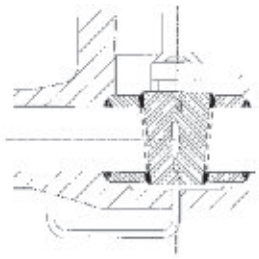

Fig. 80.6:
with equalizing pipe and bypass valves

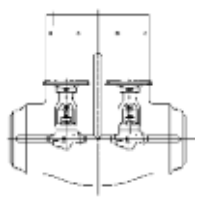

▪ Gate valves ▪ Overpressure-safety-devices ▪ PERSTA Typ SV 98 + SV 99

Materials

Pos.	Component	Material
835	Housing	1.4571
836	Connection stud	1.7335
837	Ball	WLSt
838	Gasket	2.4066
839	Valve body	1.4923
840	Union nut	CW 713 R
841	Supporting ring	FSt
842	Safety ring	FSt
843	Mechanism plate	1.0038
844	Hexagonal pipe nut	St
845	Screw pin	45H
846	Pipe screwing	1.4571
847	Steam-releasing pipe	1.4571
848	Burst disc	316 SS / Inconell 600
849	Pressure ring	1.4122
850	Pressure screw	1.4571

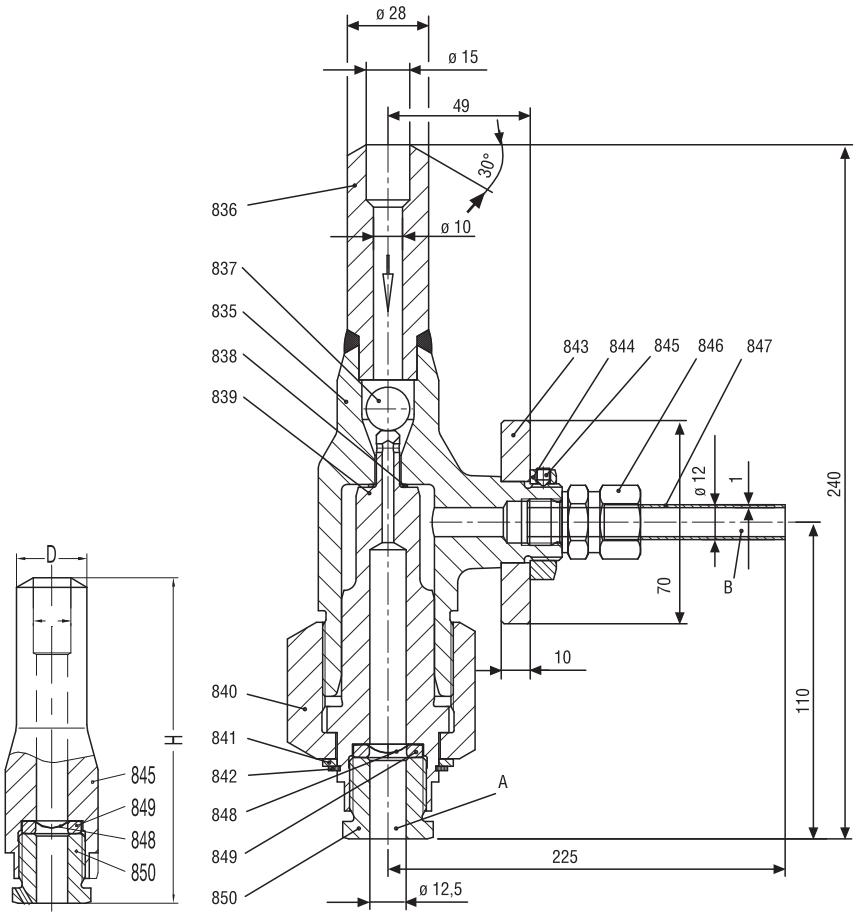

Materials

Pos.	Component	Material
845	Housing	1.7335
848	Burst disc	316 SS / Inconell 600
849	Pressure ring	1.4122
850	Pressure screw	1.4571

Assembly Sketch SV 98

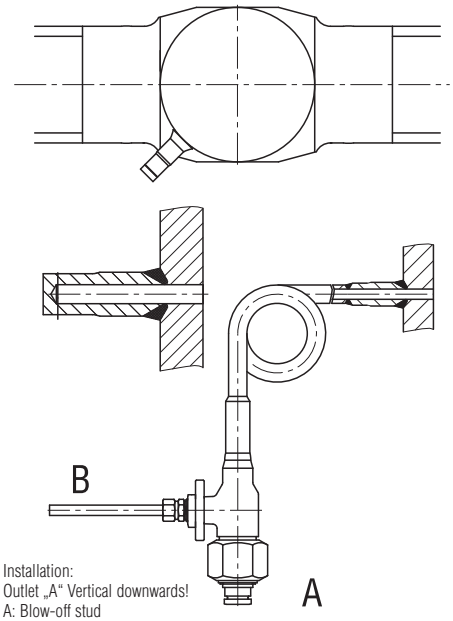

Installation:
Outlet „A“ Vertical downwards!
A: Blow-off stud
B: Steam-releasing-pipe

Assembly Sketch SV 99

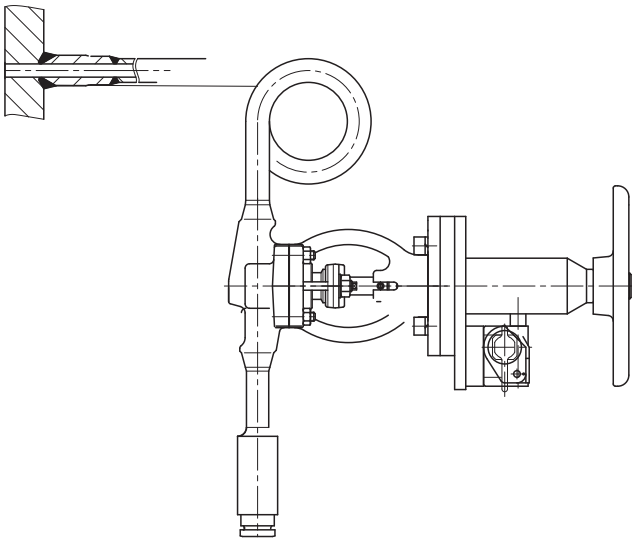

With lockable
High-pressure-globe valve