INSTALLATION, OPERATION AND MAINTENANCE MANUAL

TYPE (BE) ENCLOSED VALVE BODY
Series 2001

SMART VALVE ™ Wear Monitoring System

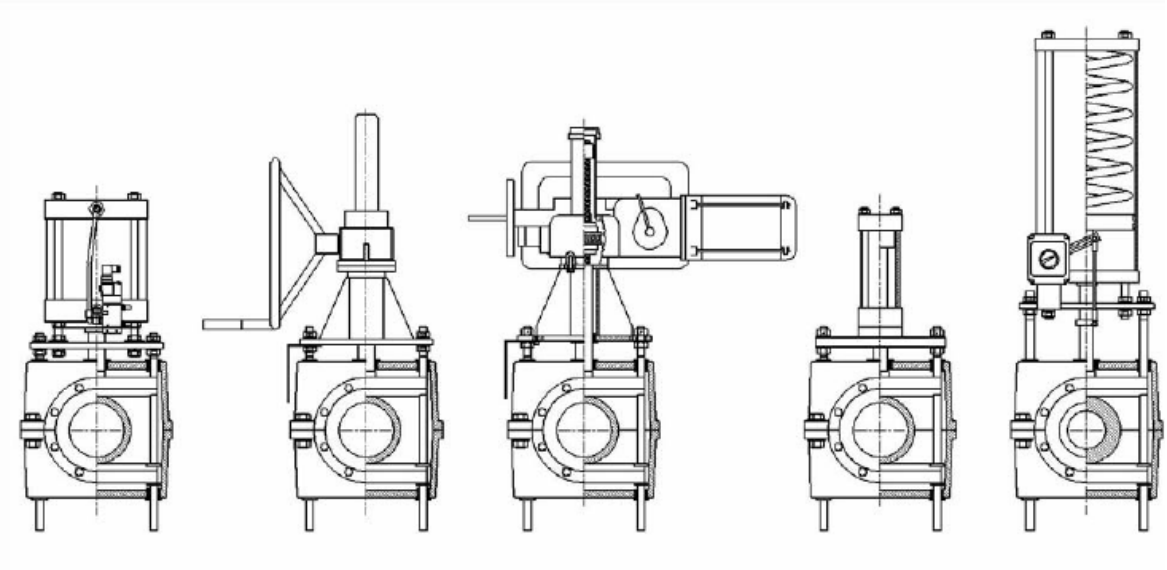

CUSTOMER SERVICE HOTLINE

Phone +1-410-850-4404

BE- 8/02 Rev. 6-01-2011

© 1993-2011 by RF Valves, Inc.

TABLE OF CONTENTS

1.0 SAFETY AND STORAGE **1**
1.1 Safety 1
1.2 RF Valve® Storage Instructions 1
1.3 Care for Fluid Power Components 1
1.4 Care for Spare Elastomer Tubes 1

2.0 INTRODUCING RF VALVE® **2**
2.1 Operating Principles 2
2.2 Why Use an RF Valve®? 2
2.3 Why Does the Elastomer Tube Inside the RF Valve® Have Arches? 3
2.4 What Are Those Wire Leads Coming Out of the RF Valve® Elastomer Tube? 4

3.0 INSTALLATION **5**
3.1 Pipeline Runs and Actuator Orientation Recommendations 5
3.2 Supporting the Actuator for Vertical Pipelines 6
3.3 Clearance for Rising Actuator 6
3.4 Clearance for Maintenance 7
3.5 Pipe Movement 7
3.6 Pipe Angular Misalignment 7
3.7 Flow Direction 7
3.8 Flange Bolt Torque Requirements 8
3.9 Flexible Lines to the RF Valve® 9
3.10 Installation – Best Practices

4.0 MAINTENANCE **10**
4.1 Changing the Elastomer Tube – In-Line Tube Change 10
4.2 Changing the Elastomer Tube – RF Valve® Off the Pipeline 12
4.3 Calibration 13

5.0 TECHNICAL MARKINGS **14**

6.0 TROUBLE SHOOTING **15**
6.1 Trouble Shooting valves
6.2 Trouble Shooting Tubes

APPENDICES
A-1 Bill of Materials
A-2 General Arrangement Drawings
A-3 Accessories

1.0 SAFETY AND STORAGE

1.1 Safety

Keep clear of moving components around the RF Valve®. The actuating mechanism generates substantial forces which can cause bodily harm and damage to tools and equipment in the path of moving parts (Fig. 1).

WARNING: The RF Valve® is carefully tailored for specific applications. To ensure the safety of equipment and personnel, **DO NOT** install the RF Valve® in a different application without first consulting RF Technologies, Inc.

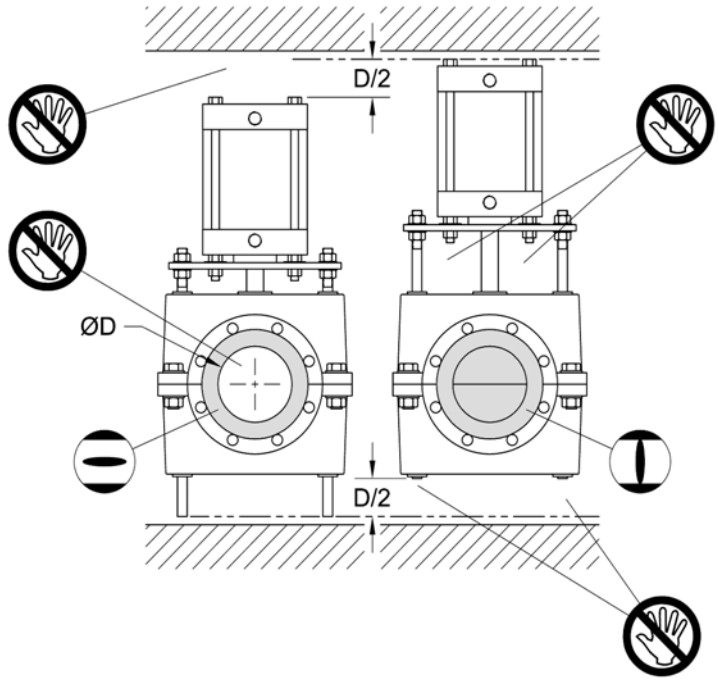

Figure 1: Beware the pinch points around the RF Valve®.

1.2 RF Valve® Storage Instructions

- RF Valves® are to be stored and transported in a dry, clean environment, protected from direct sunlight and condensate water. Temperature for storage is between -13°F to 104°F (-25°C to 40°C).
- RF Valves® are to be protected against mechanical damage or force (shock, blow, vibration, etc).
- RF Valves® should be transported and stored in the open position.

1.3 Care for Fluid Power Components

Fluid power components (actuators, solenoid valves, air sets, etc) should have protective plugs placed in their ports to keep out dust, foreign objects, and moisture.

1.4 Care for Spare Elastomer Tubes

Spare elastomer tubes are to be stored in a dark environment protected against direct sunlight and UV-radiation. Take measures to prevent the elastomer tube from coming into contact with oils, solvents, and other aggressive chemicals. Temperature for storage is between -13°F to 104°F (-25°C to 40°C).

2.0 INTRODUCING RF VALVE®

2.1 Operating Principles

A valve is used to control the flow within a pipe. The RF Valve® does this by pinching closed an elastomer tube in-line with the pipe (Fig. 2). Throttling of the flow can be accomplished by partially pinching the elastomer tube.

Note how the actuator rises, moving away from the valve body, approximately ½ the nominal diameter of the pipeline as the RF Valve® closes. A single actuator drives opposing pinch bars together to pinch the elastomer tube along the centerline.

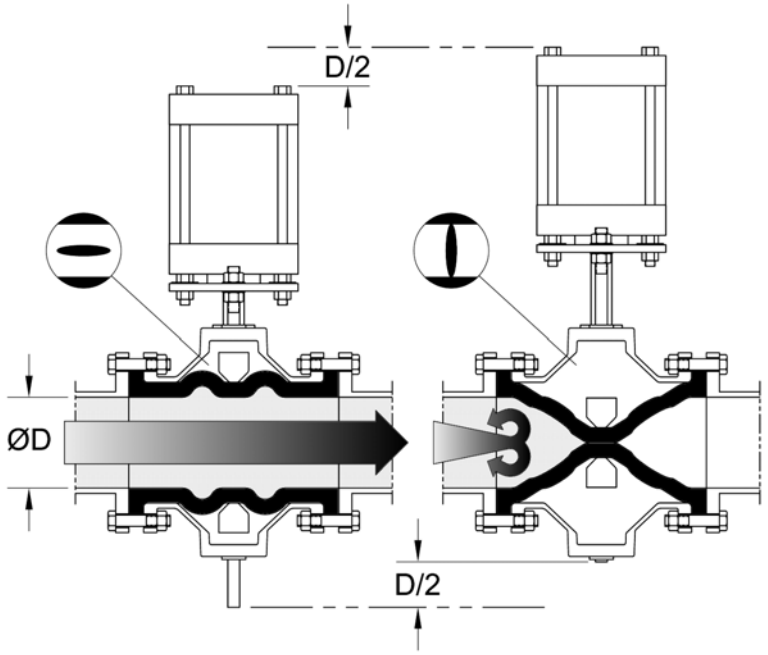

Figure 2: RF Valve® pinches an elastomer tube.

2.2 Best Use for an RF Valve®

The RF Valve® excels in applications in which solids are present in the flow media like waste water, slurries, tailings from mines, paper pulps, etc. The RF Valve® seals on solids and resists abrasion that will quickly ruin a metal seated valve (Fig. 3). Other valve designs in the same applications fail due to their inability to close on solids or their seats erode away preventing shut-off due to abrasive slurries.

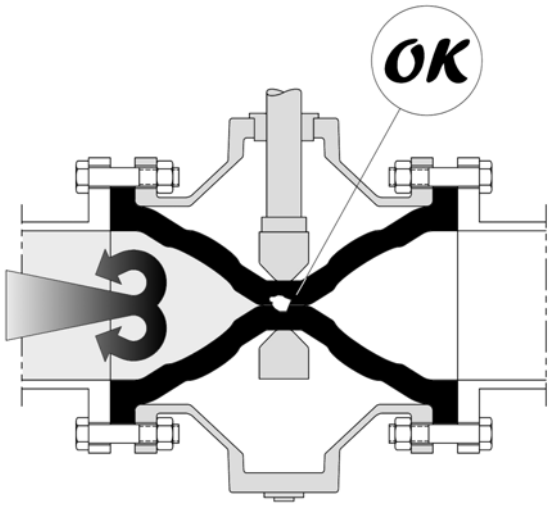

Figure 3: RF Valve® seals around solids.

2.3 RF Valve's® Patented Arch Design

The purposes of the patented arches are:

- To allow the face-to-face length of the RF Valve® to meet various piping standards (for example ASME B16 and DIN 3202 F5). This enables direct replacement of any valve with common, standard face-to-face dimensions in the field without having to modify piping (Fig. 4). With its patented arch design, the RF Valve® elastomer tube flexes, not stretches, during closure while conforming to a standard face-to-face dimension. Other pinch valves that have straight sleeves and longer face-to-face dimensions must stretch to close the valve increasing fatigue and wear.

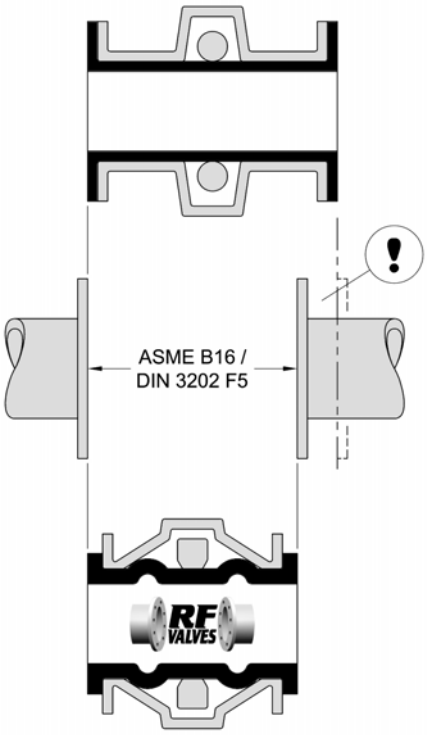

Figure 4: RF Valve® has standard face-to-face.

- To provide greater resistance to abrasion in slurry applications since the RF Valve® elastomer tube is flexed, not stretched, during closure. Just as it is easier to cut rubber under tension than when it is relaxed, elastomer tubes that stretch during closure experience increased wear (Fig. 5).

With the unique, patented design of the arched elastomer tube; the RF Valve® has unequalled performance in the industry.

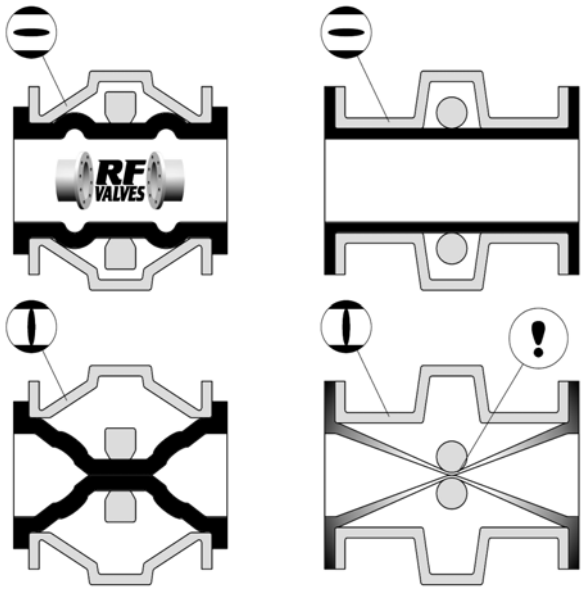

Figure 5: RF Valve's ® relaxed elastomer tube is wear resistant.

2.4 RF Valve® Elastomer Tube Wear Sensor Wire

RF Valve® elastomer tubes have an optional feature in which a continuous, spiral loop of conductive filament is molded within the wear lining of the elastomer tube. This spiral loop is called the Smart Valve™ wear monitoring sensor, or MONSYS. The two wire leads, if present, emerge from a rubber tab on the elastomer tube's flange at the ends of the spiral loop (Fig. 6).

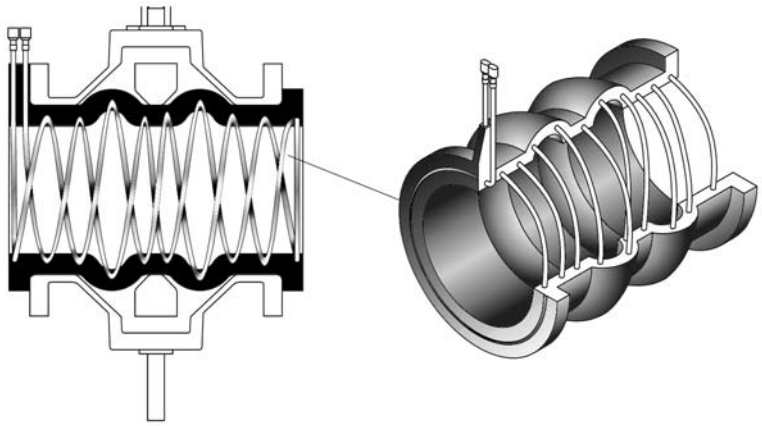

Figure 6: Wire leads are the ends of the wear sensor (MONSYS)

Just a simple 'go/no-go' check of the resistance of the wire leads using an ohm-meter (Fig. 7) can indicate if the wear lining is intact. Intact elastomer tubes will have a resistance value less than 4MΩ. Once approximately 75% of the wear rubber has been eroded the wear monitoring wire will be exposed and eventually disintegrate causing an open circuit. An ohm meter will indicate infinite resistance (zero conductivity) when this occurs.

This test can be conducted in real time while the RF Valve® is operational on the pipeline. There's no need to go through the expense of shutting down the process to take the RF Valve® out of the pipeline in order to visually inspect the wear lining.

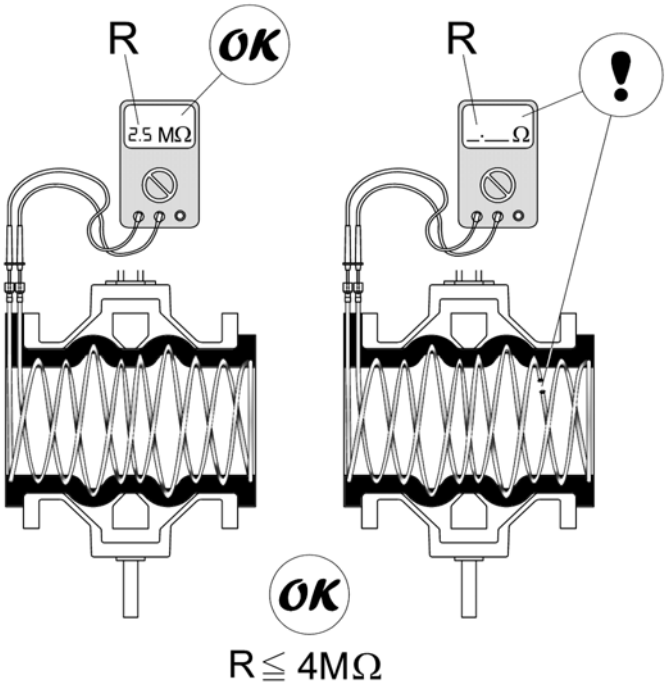

Figure 7: Use an ohm meter to check the wear sensor

Once the wear monitoring sensor indicates that the wear rubber is sufficiently eroded, preventive maintenance can be scheduled knowing that approximately 25% of the wear rubber remains intact. Check stores for spare elastomer tube.

3.0 INSTALLATION

3.1 Pipeline and Actuator Orientation Recommendations

Typical installations of the RF Valve® should have the actuator oriented above the elastomer tube and the motion of the actuator should be as close to vertical as possible. Other orientations are permissible within the guidelines illustrated below:

VERTICAL PIPE (*pipe angled 30° or more above/below horizon*): actuator can be oriented in any direction as shown in Figure 8.

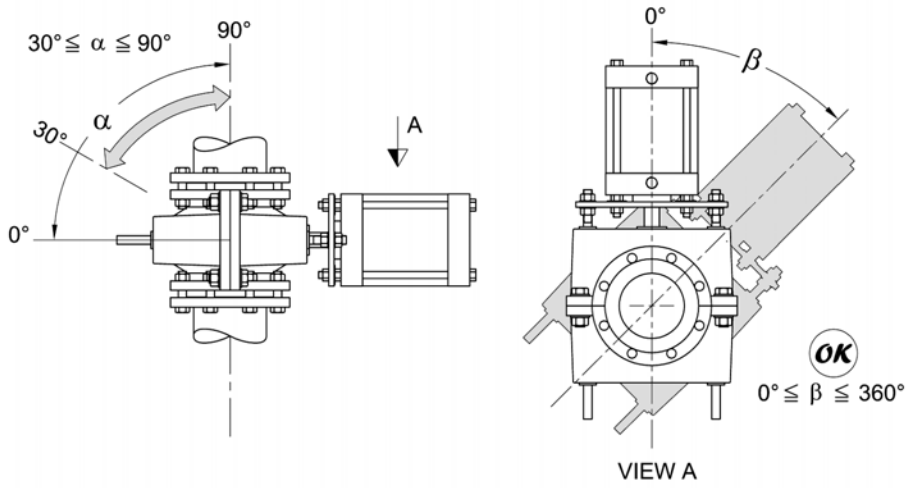

Figure 8: Actuator can be oriented any direction for vertical (30° or more) pipelines

HORIZONTAL PIPE *(pipe angled less than 30° above/below the horizon*): actuator should not be oriented sideways. Refer to Figure 9.

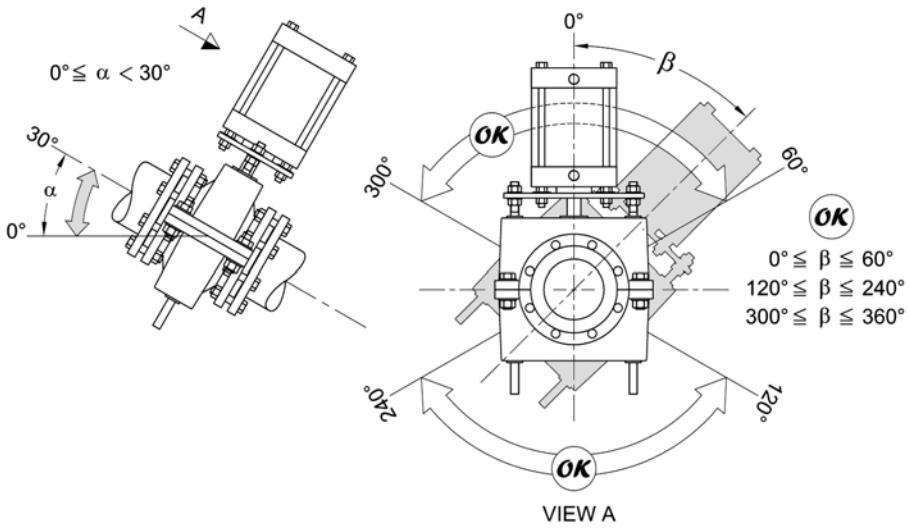

Figure 9: Actuator orientation is restricted for horizontal (less than 30°) pipelines

3.2 Supporting the Actuator for Vertical Pipelines

It is recommended to support the actuator when the RF Valve® is installed on a vertical pipeline. There are two methods of support: skid plate (Fig. 10) and overhead cable/chain (Fig. 11).

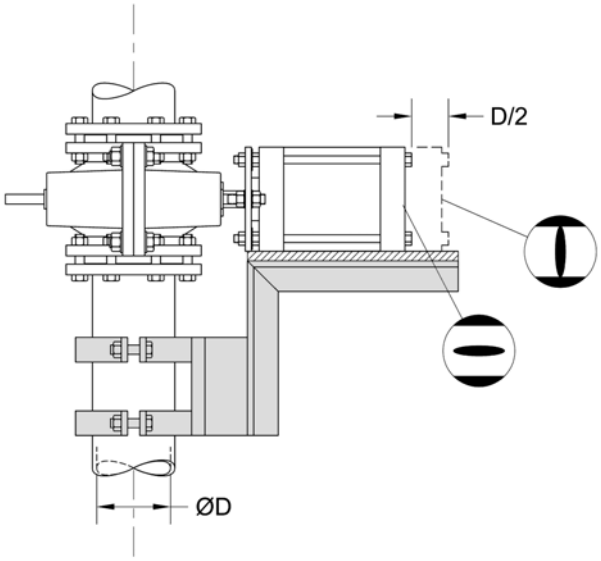

Figure 10: Skid plate support

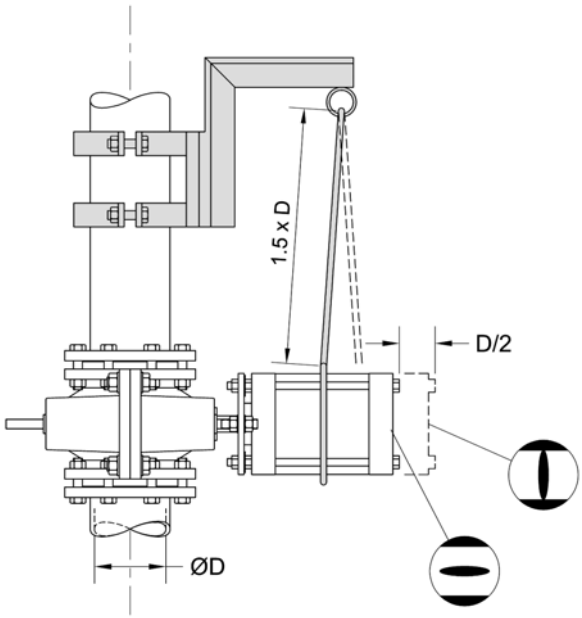

Figure 11: Overhead cable/chain support

3.3 Clearance for Rising Actuator

The actuator rises as the RF Valve® closes. Be certain there is sufficient clearance above the actuator greater than half the diameter of the pipeline (Fig. 12).

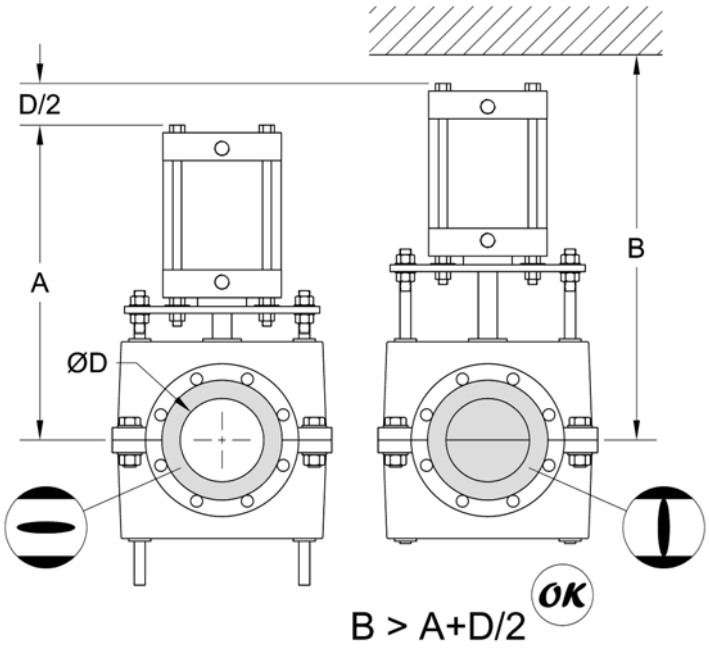

Figure 12: Clearance for the rising actuator.

3.4 Clearance for Maintenance

It is important to install the RF Valve® at a location where there is enough clearance to remove the lower body half (dimension C in Fig. 13) to make maintenance easier.

Avoid placing a support to the RF Valve® that would obstruct the removal of the lower valve body half (Fig. 14). Supporting the pipe on each side of the RF Valve® is recommended. See ***3.5 Pipe Support***.

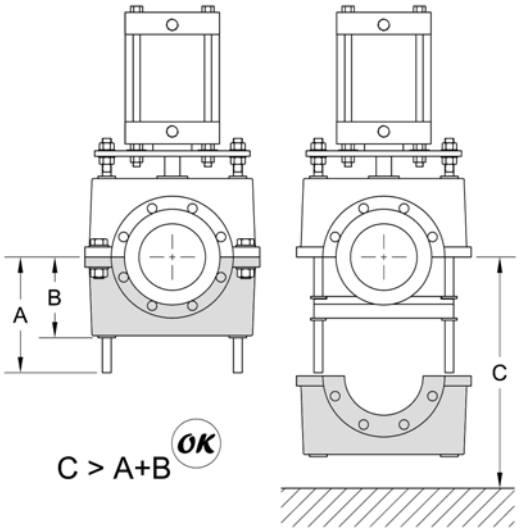

Figure 13: Clearance for maintenance

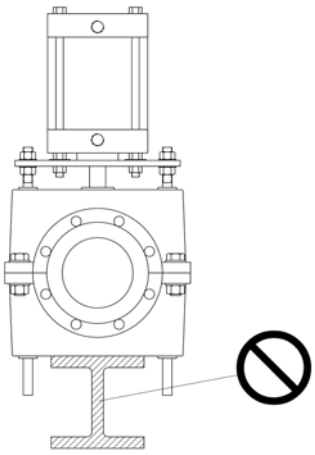

Figure 14: Do not block removal of lower body half.

3.5 Pipe Support

It is best to support the ends of the pipeline (Fig. 15) yet allow for some movement along the pipeline axis for at least one of the pipe flanges to make an effective seal.

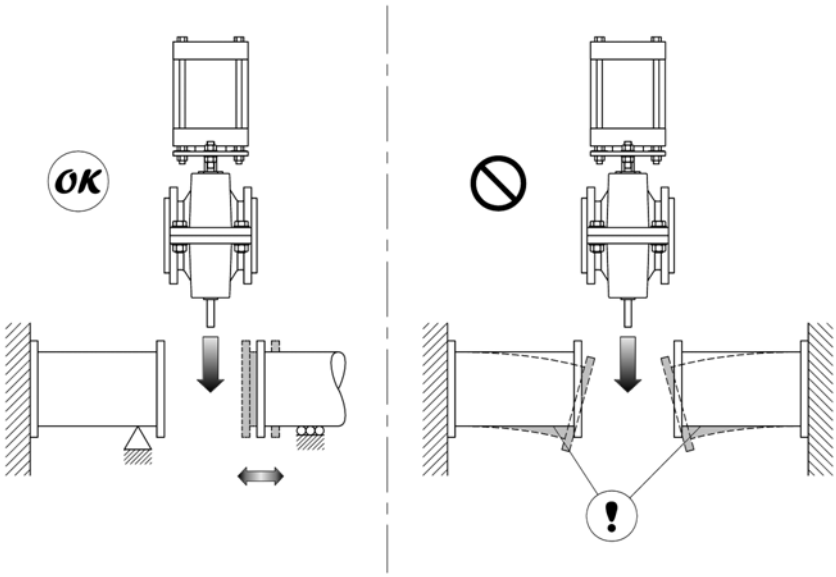

Figure 15: At least one of the pipe flanges should be able to move along the pipeline axis.

3.6 Pipe Angular Misalignment

Make sure the pipe flanges are close to parallel (Fig. 16).

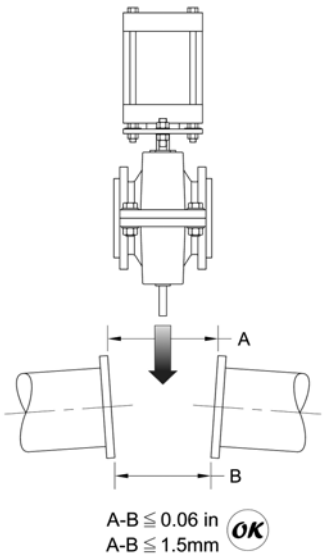

Figure 16: Check for angular misalignment.

3.7 Flow Direction

Full port RF Valves® are bi-directional. The RF Valve® can be installed in any direction with regard to flow.

Reduced port RF Valves® are uni-directional. Flow direction is from the inlet (the large opening ∅A in Fig. 17) to the outlet (the small opening ∅B in Fig. 17).

Look for an arrow on the exterior of the RF Valve® showing the proper direction of flow (Fig. 17).

3.8 Flexible Lines to the RF Valve®

When bringing electrical power and/or pneumatic/hydraulic lines to the RF Valve®, or any installed accessories (for example: limit switches, solenoid valves, air-sets), make sure the lines are flexible. The actuator will rise approximately ½ the inner diameter of the RF Valve® while closing (Fig. 18).

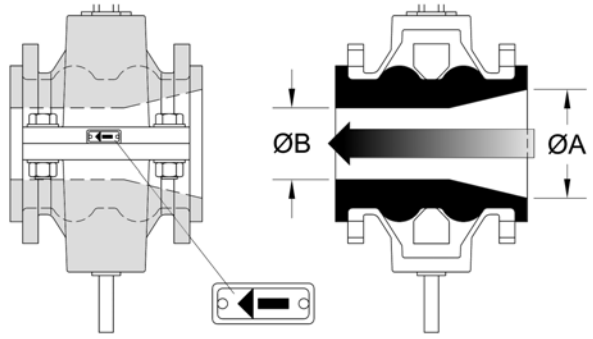

Figure 17: Flow direction for reduced port elastomer tubes.

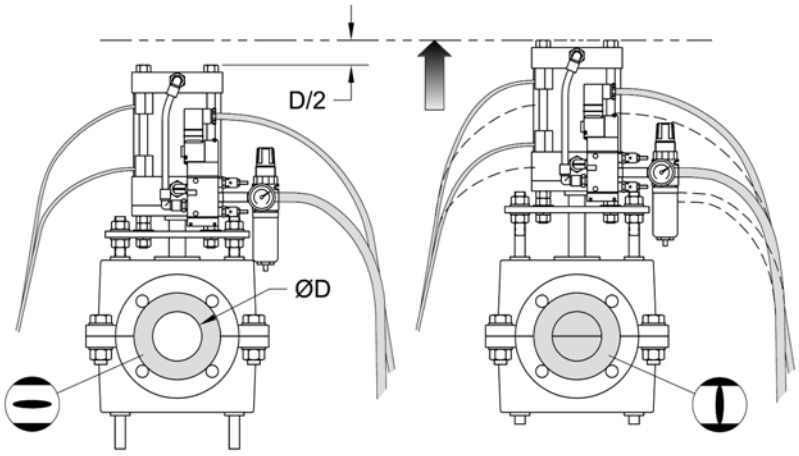

Figure 18: Electrical power and pneumatic/hydraulic lines to the RF Valve® and accessories must be flexible.

3.9 Flange Bolt Torque Requirements

Proper torque of the flange bolts is required when installing the RF Valve® to the pipeline or the elastomer tube may be damaged.

STEP 1: Use Table 1 or Table 2 to determine the specified torque value for the RF Valve® flange bolts.

STEP 2: Start with 50% of the required torque and tighten the bolts in a star pattern (Fig. 19).

STEP 3: Now use 100% of required torque and tighten the flange bolts in a star pattern (Fig. 19).

STEP 4: It may take more than one sequence until the bolts are at 100% of specified torque. Repeat STEP 3 as necessary until all flange bolts are tightened 100%.

STEP 5: Once line pressure is introduced, check the flanges for leaks. If a leak develops, tighten the flange bolt(s) nearest to the origin of the leak in 10 ft-lbs (13 Nm) increments until the leaking ceases.

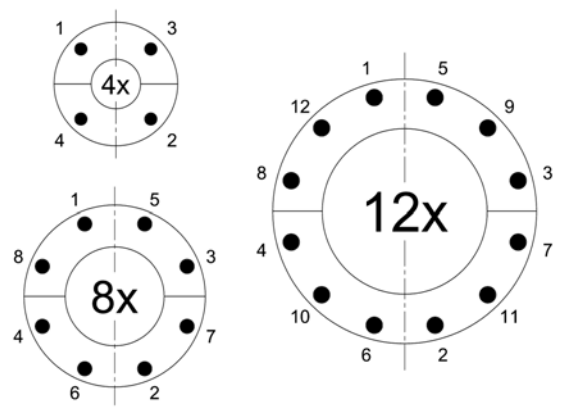

Figure 19: 4x, 8x, 12x star pattern

Table 1: ANSI 150# FLANGE TORQUE

∅DN		BOLT THREAD		T	
in	*mm*	inch	*metric*	ft-lbs	*Nm*
1	*25*	1/2-13	*M12 x 1.75*	20	*27*
1.25	*32*	1/2-13	*M12 x 1.75*	20	*27*
1.5	*40*	1/2-13	*M12 x 1.75*	20	*27*
2	*50*	5/8-11	*M16 x 2.0*	20	*27*
2.5	*65*	5/8-11	*M16 x 2.0*	20	*27*
3	*80*	5/8-11	*M16 x 2.0*	30	*41*
4	*100*	5/8-11	*M16 x 2.0*	25	*34*
5	*125*	3/4-10	*M20 x 2.5*	30	*41*
6	*150*	3/4-10	*M20 x 2.5*	40	*54*
8	*200*	3/4-10	*M20 x 2.5*	50	*68*
10	*250*	7/8-9	*M22 x 2.5*	40	*54*
12	*300*	7/8-9	*M22 x 2.5*	40	*54*
14	*350*	1-8	*M24 x 3.0*	60	*81*
16	*400*	1-8	*M24 x 3.0*	50	*68*
18	*450*	1 1/8-7	*M30 x 3.5*	60	*81*
20	*500*	1 1/8-7	*M30 x 3.5*	65	*88*

Table 2: DIN PN10 FLANGE TORQUE

∅DN		BOLT THREAD		T	
mm	*in*	metric	*inch*	Nm	*ft-lbs*
25	*1*	M12 x 1.75	*1/2-13*	12	*9*
32	*1.25*	M16 x 2.0	*5/8-11*	20	*15*
40	*1.5*	M16 x 2.0	*5/8-11*	20	*15*
50	*2*	M16 x 2.0	*5/8-11*	20	*15*
65	*2.5*	M16 x 2.0	*5/8-11*	25	*18*
80	*3*	M16 x 2.0	*5/8-11*	30	*22*
100	*4*	M16 x 2.0	*5/8-11*	30	*22*
125	*5*	M16 x 2.0	*3/4-10*	35	*26*
150	*6*	M20 x 2.5	*3/4-10*	45	*33*
200	*8*	M20 x 2.5	*3/4-10*	55	*41*
250	*10*	M20 x 2.5	*3/4-10*	55	*41*
300	*12*	M20 x 2.5	*3/4-10*	65	*48*
350	*14*	M20 x 2.5	*3/4-10*	65	*48*
400	*16*	M24 x 3.0	*1-8*	81	*60*
450	*18*	M24 x 3.0	*1-8*	81	*60*
500	*20*	M24 x 3.0	*1-8*	81	*60*

BEST INSTALLATION PRACTICES

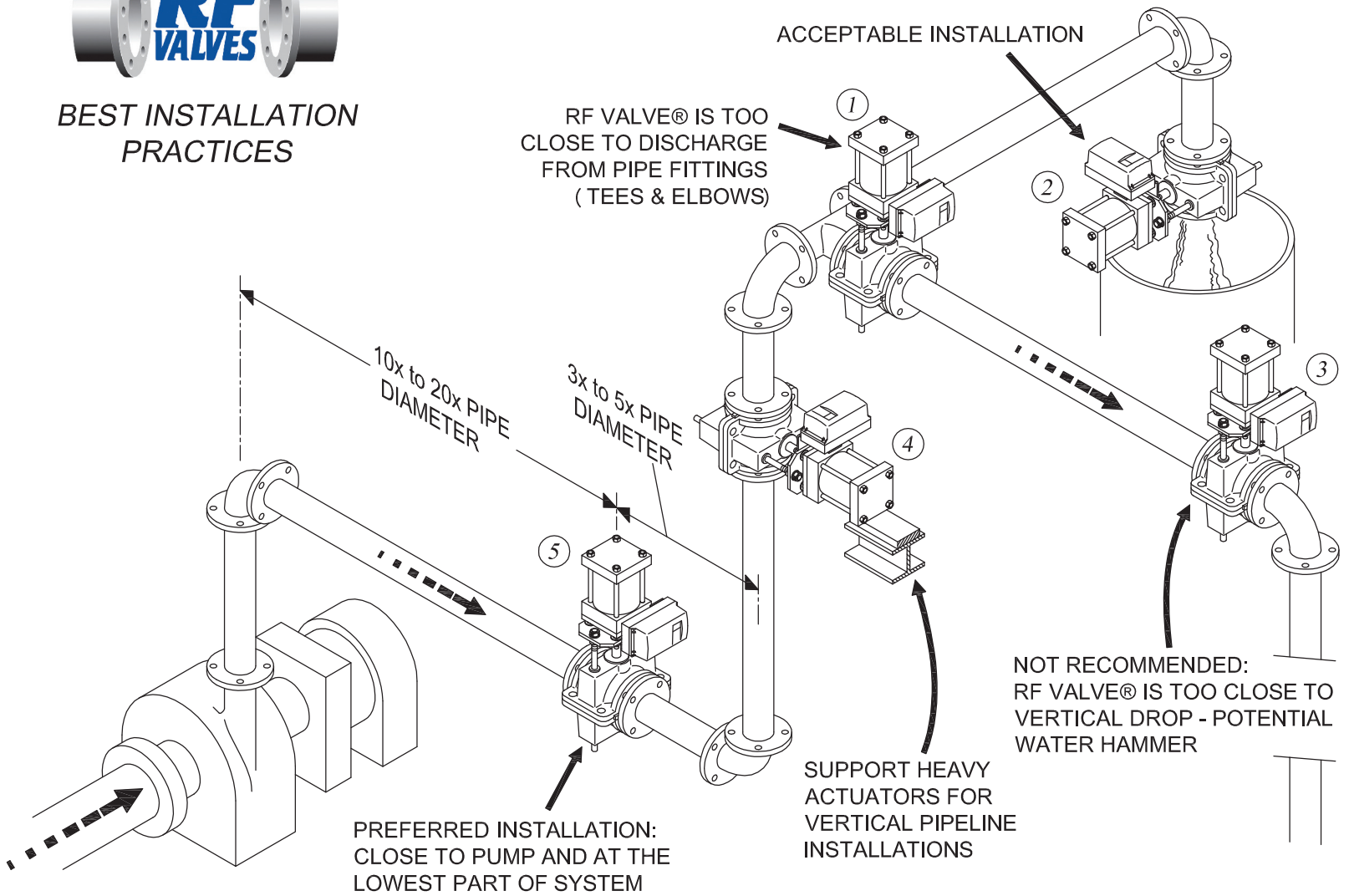

4.0 MAINTENANCE

4.1 Changing the Elastomer Tube – In-Line Tube Change

Follow the steps below to change out the elastomer tube while the RF Valve® is installed in the pipeline.

STEP 1: RF Valve® should be isolated from the plant process and actuated to its open position. Take appropriate lock-out measures to prevent accidental actuation of the RF Valve® until it is ready to be put back in operation. Review section ***1.1 Safety*** about the pinch point hazards around the RF Valve®.

STEP 2: Remove flange bolts (B) supporting the lower valve body (Fig. 19). Loosen, but do not remove, the flange bolts (A) supporting the upper valve body (Fig. 20).

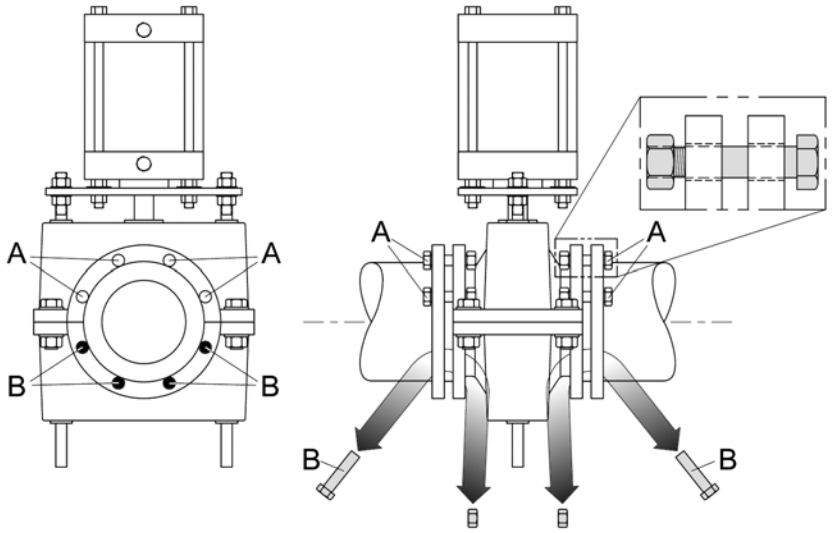

Figure 20: Remove flange bolts (B) and loosen flange bolts (A).

STEP 3: Remove the body bolts from the RF Valve® to detach the lower valve body. Note that some RF Valves® come equipped with guide pieces (see View A in Fig. 21). Do not lose them as they will be needed later for reassembly.

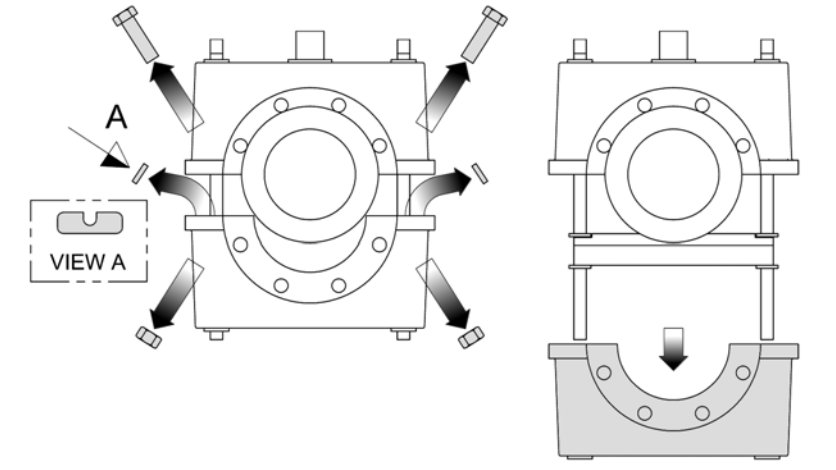

Figure 21: Remove the body bolts and take away the lower valve body.

STEP 4: Loosen the B-nut (Fig. 22). Take care that the A-nut does not turn. Spread the pull bars apart to take away the lower pinch bar and remove the elastomer tube.

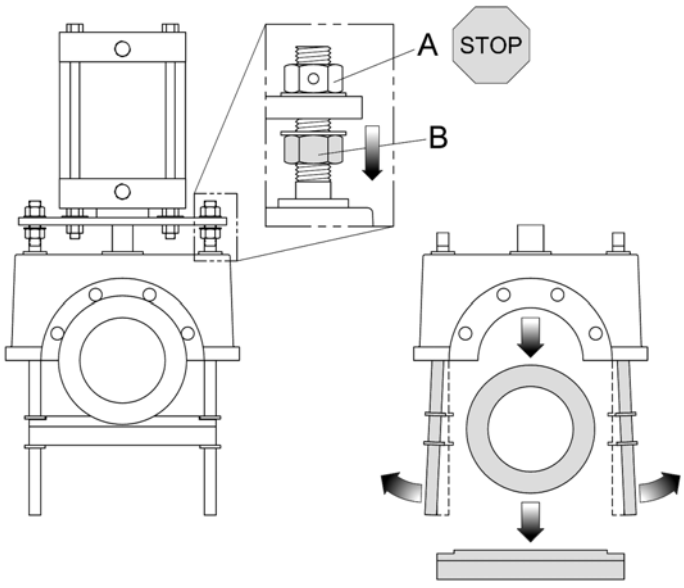

Figure 22: Steps to remove the elastomer tube.

STEP 5: Install the replacement elastomer tube. Reverse STEPS 1 to 3 to reassemble the RF Valve®. Ensure that the lower pinch bar is installed in the proper orientation (Fig. 23).

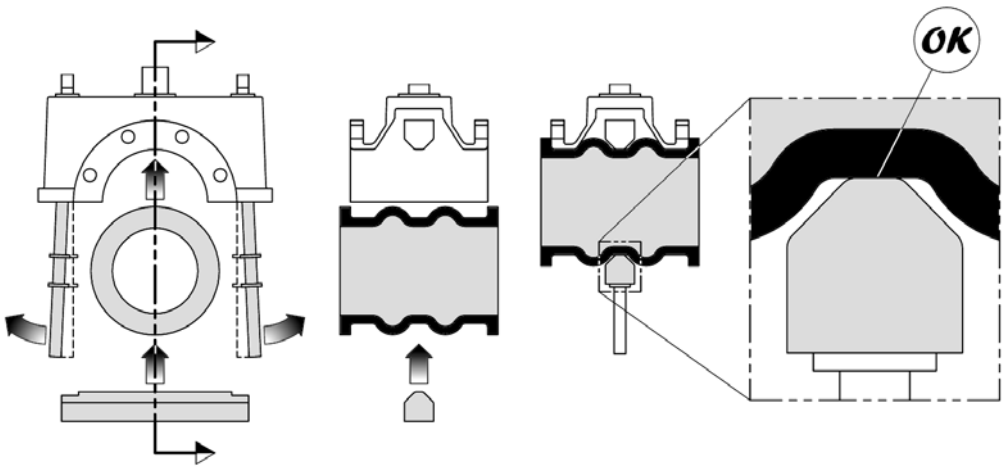

Figure 23: Be sure to re-install the lower pinch bar in the proper orientation.

STEP 6: Once the RF Valve® is reassembled, follow the procedures in section ***3.8 Flange Bolt Torque Requirements.***

4.2 Changing the Elastomer Tube – RF Valve® Off the Pipeline

STEP 1: Remove the RF Valve® from the pipeline. Then place the RF Valve® either standing on its actuator or lay it on the ground (Fig. 24) preferably on a smooth, clean surface. When laying the RF Valve® down be sure not to crush any fragile accessories.

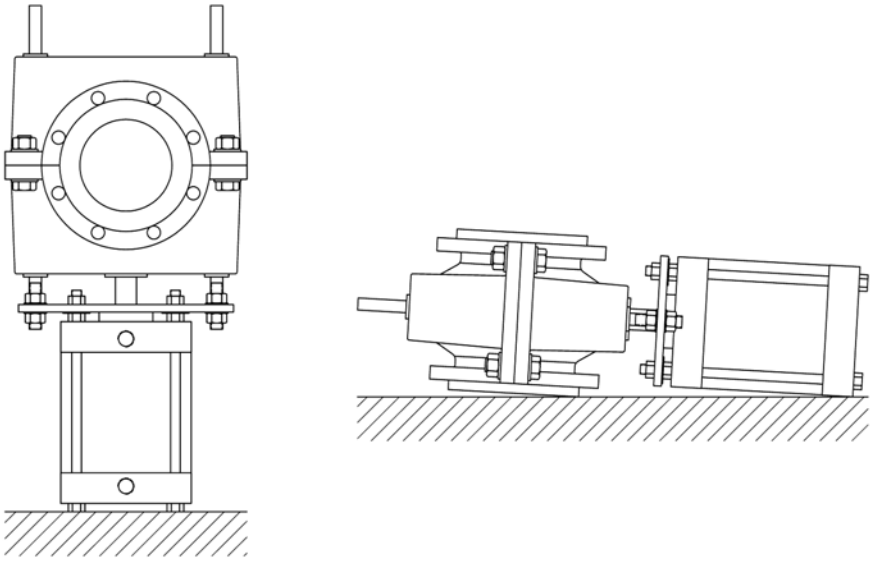

Figure 24: Two options to change the elastomer tube with the RF Valve® off the pipeline

STEP 2: The remaining procedures are the same as STEPS 2 to 5 shown in section ***4.1 Changing an Elastomer Tube – In-Line Tube Change***.

4.3 Calibration

The RF Valve® is factory calibrated to close with the amount of force necessary to seal against the applicable line pressure. After calibration, a set screw is inserted into each of the A-nuts and a coating of blue rubber is applied to the pull bar threads above the A-nut to certify RF Valve's factory calibration (Fig. 24).

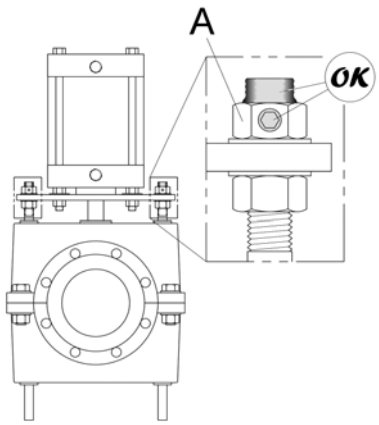

Figure 24: Factory calibration is set with a set screw and a coating of rubber on the pull bar.

Tampering with or changing the position of the A-nut will disturb the factory calibration which can have adverse effects on the elastomer tube life and/or the function of the RF Valve®.

Re-calibration becomes necessary when:

- it appears the A-nuts have been disturbed (for example: missing set screw and/or missing blue rubber coating). See Fig. 24.
- after removing the elastomer tube, deep cuts are found on the exterior of the elastomer tube where the pinch bars come into contact
- if wear inside the elastomer tube appears uneven

If recalibration seems warranted, its best to consult RF Valves, Inc. for confirmation. Contact information is at the bottom of the page.

4.4 Calibration Instructions for Open/Close RF Valve® with Pneumatic or Hydraulic Actuator

The following calibration instructions are only applicable to RF Valves® in open/close (on/off) service with a pneumatic or hydraulic actuator.

The RF Valve® is factory calibrated to close with the amount of crush necessary to seal against the applicable line pressure. After calibration, a set screw is inserted into each of the A-nuts and a coating of blue rubber is applied to the pull bar threads above the A-nut (Fig. 1).

Tampering with the A-nut will disturb the factory calibration which can have adverse effects on the elastomer tube and/or the function of the RF Valve®.

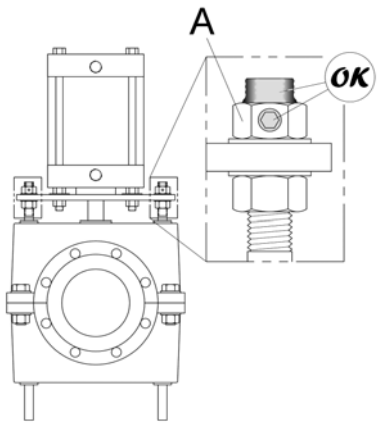

Figure 1: Factory calibration is set with a set screw and a coating of rubber on the pull bar.

Re-calibration becomes necessary when:

- it appears the A-nuts have been disturbed (for example: missing set screw and/or missing blue rubber coating). See Fig. 1.
- after removing the elastomer tube, deep cuts are found on the exterior of the elastomer tube where the pinch bars come into contact
- if wear inside the elastomer tube appears uneven

If recalibration seems warranted, it's best to consult RF Valves for confirmation. Contact information is at the bottom of the page.

STEP 1: Have a feeler gauge handy. In addition the RF Valve® must:

- be taken out of the pipeline
- have supply pressure available to actuate the RF Valve®:
  - minimum 80psi (5.5 bar) for pneumatic actuators
  - minimum 1500psi (100 bar) for hydraulic actuators

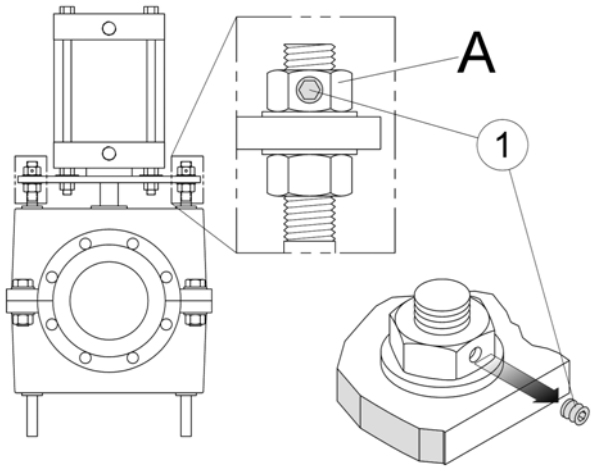

Figure 2: Remove set screw from A-nut.

STEP 2: Remove the set screw ① from each A-nut and cut/scrape away as much as possible the blue rubber coating above each A-nut (Fig. 2).

STEP 3: Now loosen each A-nut until they come to the ends of their respective pull bar ② (Fig. 3).

STEP 4: Actuate the RF Valve® closed. Be sure to use sufficient supply pressure as indicated in STEP 1. After actuation the RF Valve® will not close completely. There will be a gap, X, inside (Fig. 4).

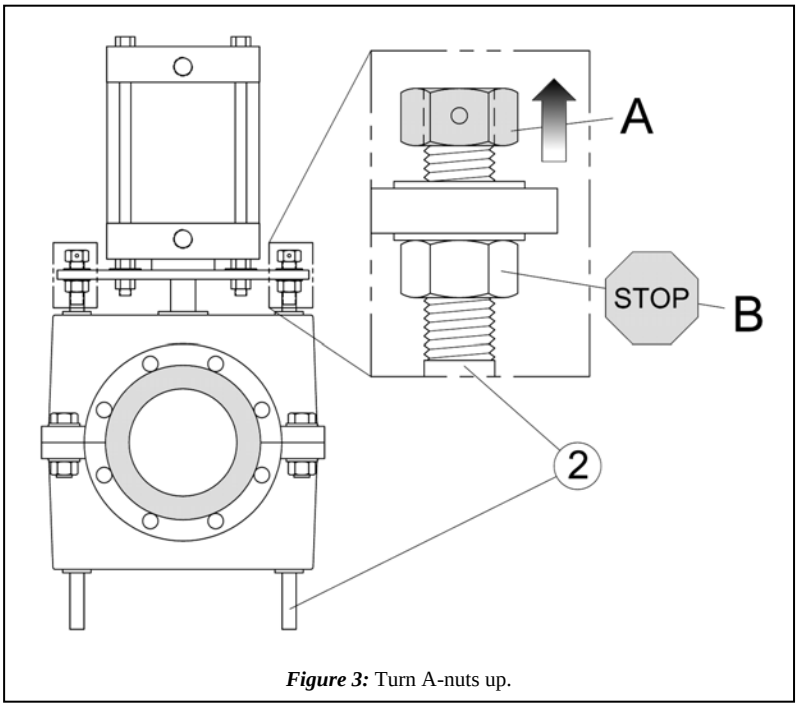

Figure 3: Turn A-nuts up.

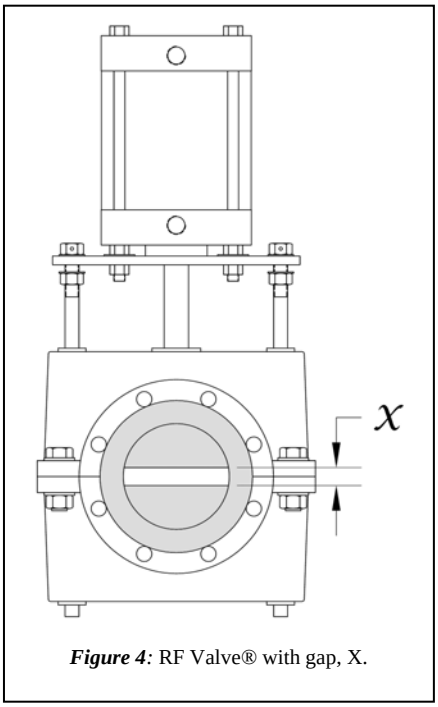

Figure 4: RF Valve® with gap, X.

STEP 5: Determine the size of the gap, X, inside the RF Valve®. Now turn both B-nuts away from the fastening plate ③ a distance X – 0.13" (or X – 3mm).

DO NOT turn the B-nuts away from the fastening plate ③ more than the measurement, X! (Fig. 5).

[EXAMPLE: If gap X is 0.25" (6mm) then the B-nuts should be turned away from the fastening plate ③ approximately 0.12" (3mm)]

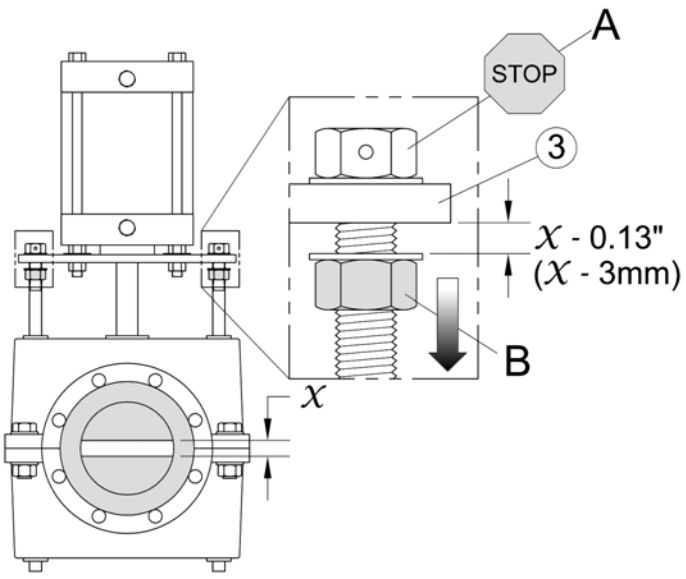

Figure 5: Move the B-nuts away from the fastening plate..

STEP 6: Actuate the RF Valve® open and then turn the A-nuts against the fastening plate ③ (Fig. 6). DO NOT allow the B-nuts to turn along the pull bar ② during this step!

STEP 7: Actuate the RF Valve® closed again and measure the size of the new gap, y. It should be roughly 0.13" (3mm) in size (Fig. 7).

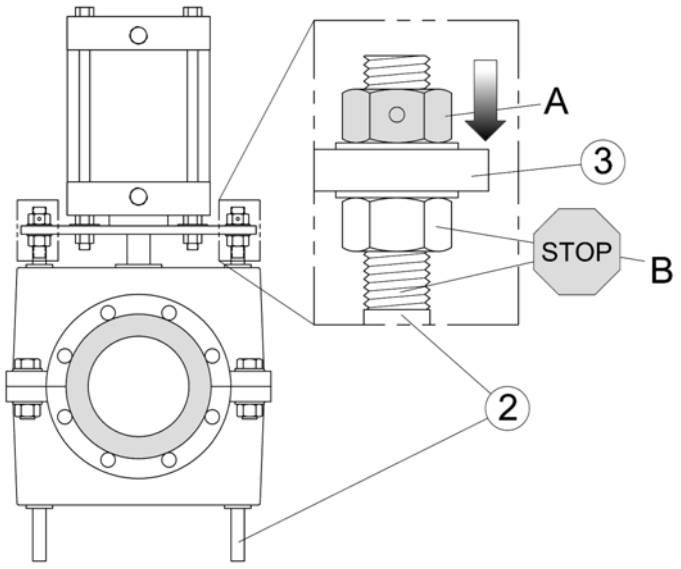

Figure 6: Turn the A-nuts against the fastening plate.

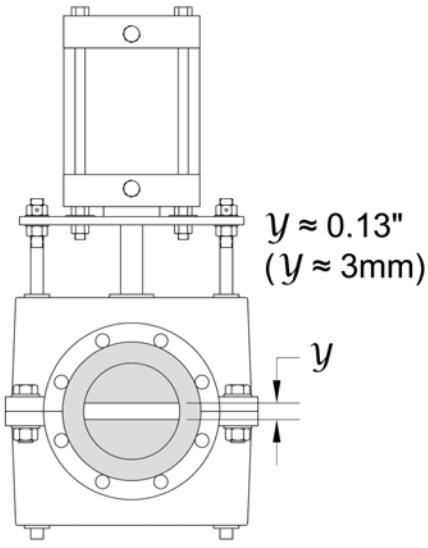

Figure 7: Measure the new gap, y.

The previous 7 steps demonstrated how the closure of the RF Valve® is adjusted just by changing the position of the A-nuts along the pull bar. When the A-nuts where at the end of the pull bars, the RF Valve® did not close all the way – there was a gap, $\mathcal{X}$ (Fig. 8a). By bringing the A-nuts downward a distance, $\mathcal{D}$, along the pull bar it will cause the gap inside the RF Valve® to become smaller by $\mathcal{D}$ (Fig. 8b). On the other hand, to make the gap inside larger by an amount $\mathcal{U}$, the A-nuts should be repositioned upward a distance $\mathcal{U}$ (Fig. 9a & 9b).

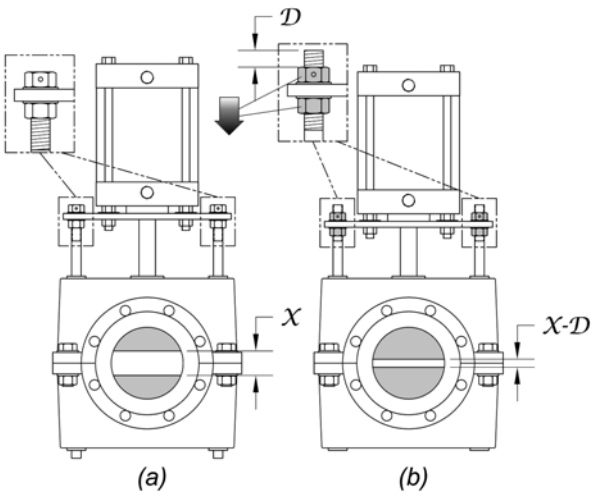

Figure 8: Move A-nuts down to make gap smaller.

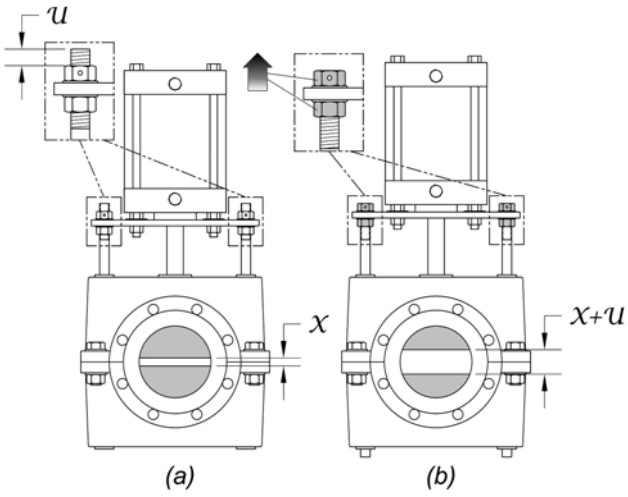

Figure 9: Move A-nuts up to make gap bigger.

STEP 8: The next objective is to make the gap inside the RF Valve® 0.02" (0.5mm) AND the gap should be evenly distributed about the centerline of the RF Valve®.

NOTE: one or two gaps may be present (Fig. 10). In the case of two gaps, both should end up a measurement of 0.02" (0.5mm).

NOTE: for the two gap case, the gaps may be at the extremes of the closure preventing them from being observed directly. In this case the feeler gauge will have to be used blindly.

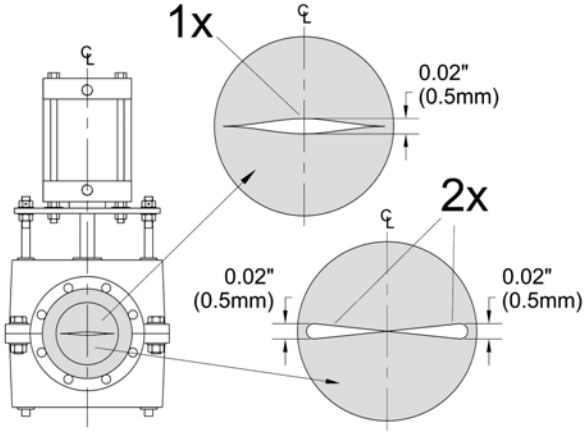

Figure 10: Next objective: the 0.02" (0.5mm) gap(s).

STEP 9: *FINE ADJUSTMENT FOR ONE GAP*

If the RF Valve® appears to have a single gap, be sure the gap is centered within the RF Valve®.

If the gap appears to be off-center (Figs. 11 & 12), adjustments will have to be done to the A-nuts.

The are two simple rules:

- to make the gap smaller, the A-nut should go DOWN (Fig. 11)
- to make the gap bigger, the A-nut should go UP (Fig. 12)

It may take a few iterations to get it right.

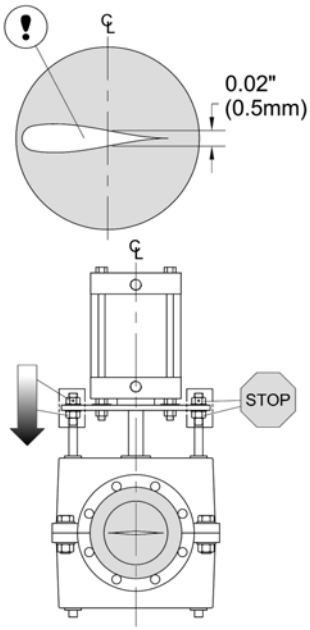

Figure 11: Left A-nut should go down to make the gap smaller on the left.

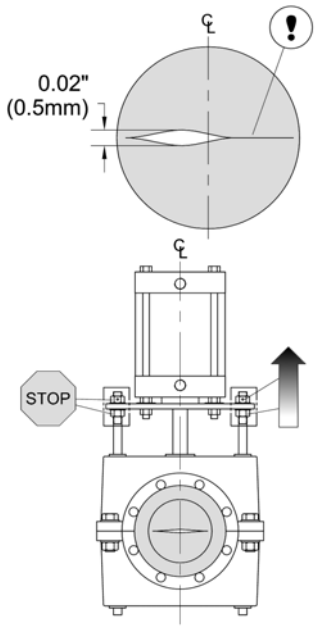

Figure 12: Right A-nut should go up to make the gap bigger on the right.

STEP 10: *FINE ADJUSTMENT FOR TWO GAPS*

If the RF Valve® appears to have two gaps, be sure the gaps are equally 0.02" (0.5mm) in size and appear evenly across the interior.

If the gaps appear to be uneven (Figs. 13 & 14), adjustments will have to be done the A-nuts.

The are two simple rules:

- to make the gap smaller, the A-nut should go DOWN (Fig. 13)
- to make the gap bigger, the A-nut should go UP (Fig. 14)

It may take a few iterations to get it right.

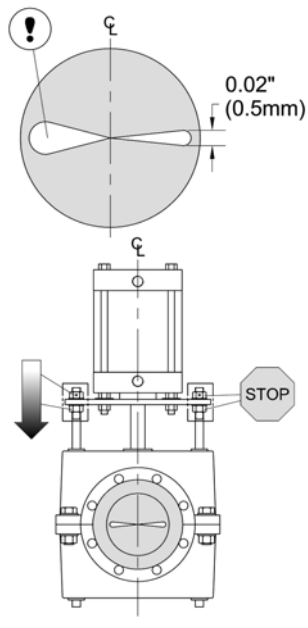

Figure 13: Left A-nut should go down to make the gap on the left smaller.

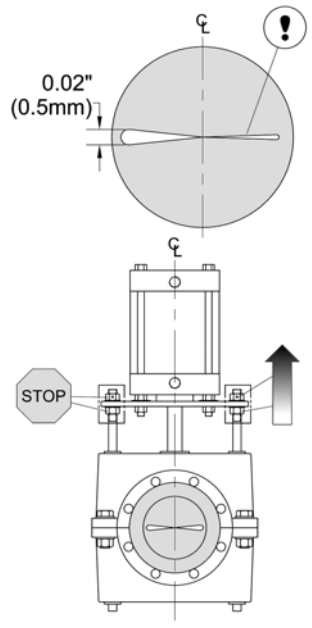

Figure 14: Right A-nut should go up to make the gap on the right bigger.

STEP 11: Once the gap(s) are set with the RF Valve® closed, turn the B-nuts (Fig. 15) away from the fastening plate ③ a number of turns as found in table 1 (next page).

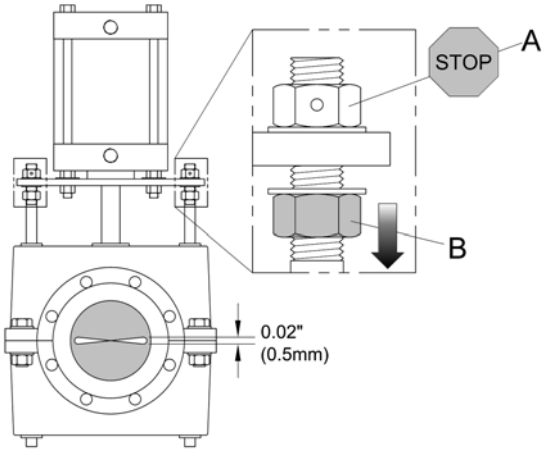

Figure 15: Spin down the B-nuts per Table 1.

The LINE SIZE and the LINE PRESSURE are stamped on a stainless steel name plate on the side of the RF Valve®.

An example of a stamped nameplate is shown in Fig. 16. For this example:

LINE SIZE = ① = 4”

LINE PRESSURE = ② = 150psi

Thus from Table 3 the B-nut should be spun 2 turns.

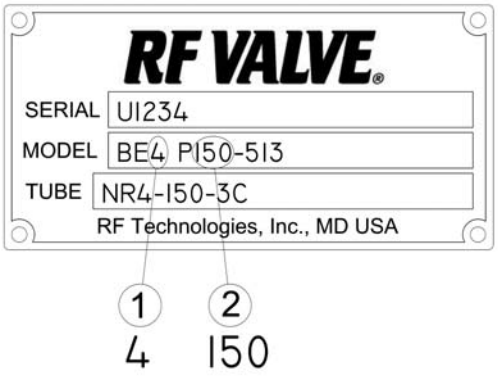

Figure 16: Finding the LINE SIZE and the LINE PRESSURE on the nameplate.

Another example of a nameplate is shown in Fig 17. For this example:

LINE SIZE = ③ = 100mm

LINE PRESSURE = ④ = 10bar

Thus from Table 3 the B-nut should be spun 2 turns.

For more information about nameplates, see section **5.0 TECHNICAL MARKINGS.**

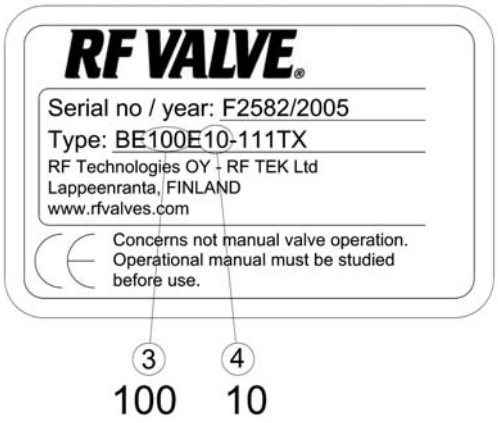

Figure 17: Finding the LINE SIZE and the LINE PRESSURE on the nameplate.

TABLE 1: IMPERIAL UNITS

LINE SIZE *(in)*	1...1.25	1.5...3	4...6	8	10....14		16...20
LINE PRESSURE *(psi)*	0…150				0...30	31...150	0...90
number of nut turns	**2.75**	**2**	**1.75**	**1.5**	**1.25**	**1.75**	**1.75**

TABLE 1: METRIC UNITS

LINE SIZE *(mm)*	25...32	40...80	100...150	200	250..350		400...500
LINE PRESSURE *(bar)*	0…10				0...2	3...10	0...6
number of nut turns	**2.75**	**2**	**1.75**	**1.5**	**1.25**	**1.75**	**1.75**

See Fig. 18 below for explanation of fractional nut turn

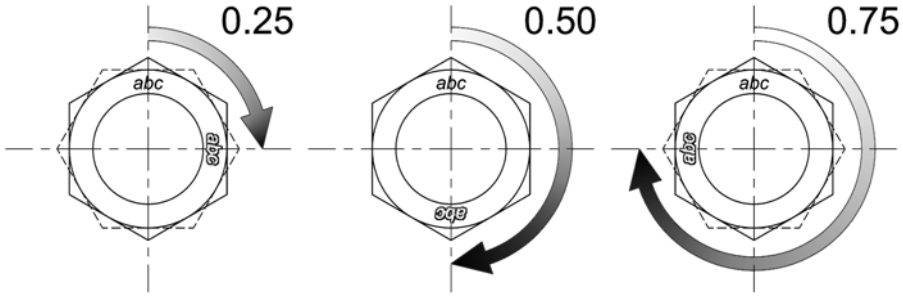

Figure 18: Fractional nut turn terminology.

STEP 12: Actuate the RF Valve® open and tighten both A-nuts against the fastening plate ③ (Fig. 19). DO NOT allow the B-nut to turn along the pull bar ② during this step.

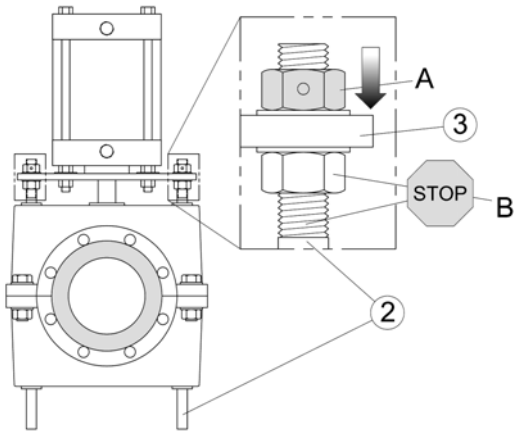

Figure 19: Turn the A-nuts against the fastening plate.

STEP 13: Actuate the RF Valve® closed and insert a set screw into each of the A-nuts. If the hole in the A-nut is inaccessible, then it can be made accessible by doing the following:

- start with RF Valve® closed
- spin both B-nuts down at least one turn (box 1 in Fig. 19).
- actuate the RF Valve® open (box 2 in Fig. 19).
- turn both the pull bar ② and the A-nut simultaneously as if they were one part until the hole in the A-nut is accessible (boxes 3 and 4 in Fig 19).
- actuate the RF Valve® closed and insert the set screw.

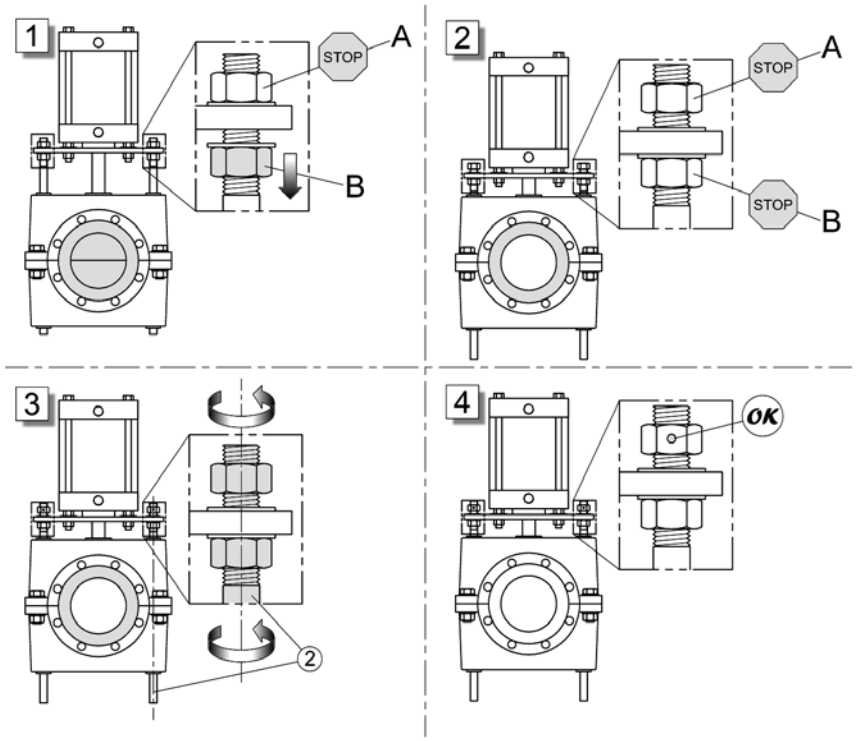

Figure 19: Getting access to the set screw.

STEP 14: Tighten the B-nuts against the bottom of the fastening plate. DO NOT allow the A-nut to turn along the pull bar during this step.

STEP 15: Actuate the RF Valve® open and follow the instructions in section **3.0 INSTALLATION** to put the RF Valve® back in service.

5.0 TECHNICAL MARKINGS: VALVE MODEL AND TUBE MODEL

(Imperial Example) Valve Model: BE4/3 PF90-513T

(Metric Example) Valve Model: BE100/80 PF6-513T

BE	**4/3**	**PF**	**90**	**-**	**5**	**1**	**3**	**T**
BE	**100/80**	**PF**	**6**	**-**	**5**	**1**	**3**	**T**

Body Type	Valve ID (DN)
BE = Body Enclosed	1 - 60 (inches)
BS = Body Sealed	25 - 1500 (mm)
BO = Body Open	Reduced Port (Inlet / Outlet)

Actuator Type	Operating Pressure
A = Air Actuated (aiRFlex)	15 = 15psi
with: Positioner	50 = 50psi
F = ElectroPneumatic	90 = 90psi
D = Pneumatic	150 = 150psi
E = Electro-mechanic Actuator	300 = 300psi
with: F = Electric Positioner	1 = 1bar
H = Hydraulic Actuator	4 = 4bar
with: M = Manual Pump	6 = 6bar
G = Motor Gear	10 = 10bar
M = Manual Handwheel	16 = 16bar
with: G = Gear Reducer	25 = 25bar
L = Lock Out	40 = 40bar
P = Pneumatic Actuator	
with: M = Manual Override Positioner	
F = ElectroPneumatic	
D = Pneumatic	
Air Spring	
RO = Fail Open	
RC = Fail Close	
Mechanical Spring	
KO = Fail Open	
KC = Fail Close	

Flange Drilling	Body Material	Face-to-Face Standard	Accessories
1 = DIN PN10	1 = Cast Iron	1 = DIN 3202 F5	A = Manual Air Valve Switch
2 = DIN PN16	2 = Welded Carbon Steel	2 = DIN 3202 F15	C = MONSYS Box
3 = DIN PN25	3 = Stainless Steel (AISI 316)	3 = ASME B-16 (Short)	G = Gauges
4 = DIN PN40	4 = Aluminum	4 = ASME B-16 (Long)	L = Proximity Limit Switches
5 = ANSI 150#	5 = Ductile Cast Iron	5 = ISO 5752 (Table 6)	N = Mechanical Limit Switches
6 = ANSI 300#	9 = Other	9 = No Standard	Y = Magnetic Limit Switches
7 = ANSI 600#			P = Pressure Switch
8 = JIS 10			Q = Quick Exhaust Valves
9 = AS2129 (Table D/E)			R = Filter/Regulator
0 = Other			S = Solenoid
			T = Opening Tags
			V = Vacuum Pump
			X = Special Requirements

(Imperial Example) Tube Model: PGR4/3-150-3CST

(Metric Example) Tube Model: PGR100/80 10-3CST

PGR	**4/3**	**-**	**150**	**-**	**3**		**CST**	
PGR	**100/80**	**-**	**10**	**-**	**3**		**CST**	

Tube Material	Tube ID (DN)
CR = Chloroprene Rubber (Neoprene®)	1 - 60 (inches)
CSM = Chloro-Sulfonated Polyethylene Rubber (Hypalon®)	25 - 1500 (mm)
EPDM = Ethylene-Propylene Rubber (Nordel®)	
EPDMH = Peroxide Vulcanized EPDM Rubber	Reduced Port (Inlet / Outlet)
FPM = Fluoro-Carbon Rubber (Viton®)	
HNBR = Hydrogenated Nitrile Rubber	
IIR = Chloro-Butyl Rubber	
NBR = Nitrile Rubber (Buna-N®)	
NR = Natural Rubber	
PGR = Pure Gum Rubber	
SBR = Styrene Butadiene Rubber	
with HT = High Temperature Rated	
FB = Foodgrade Black	
FW = Foodgrade White	

Pressure Rating
15 = 15psi
50 = 50psi
90 = 90psi
150 = 150psi
300 = 300psi
600 = 600psi
1 = 1bar
4 = 4bar
6 = 6bar
10 = 10bar
16 = 16bar
25 = 25bar
40 = 40bar

Face-to-Face Standard	Accessories
1 = DIN 3202 F5	A = aiRFlex design
2 = DIN 3202 F15	C = Wear Sensor Wire
3 = ASME B-16 (Short)	T = Opening Tags
4 = ASME B-16 (Long)	S = Single Cone (reduced port)
5 = ISO 5752 (Table 6)	D = Double Cone (reduced port)
9 = No Standard	Z = Straight Interior (filled arches)
	F = Full Flanges
	X = Special Requirements

TROUBLE SHOOTING, VALVE TYPES BE/BO/BSP****

DISTURBANCE	POSSIBLE DEFECT	ACTION
Valve is leaking (in flow direction).	Air pressure in the actuator is too low Or fluid pressure higher than rated.	Check the air supply pressure. Generally min 6 bar. Check fluid pressure. Valve type marking indicates the max rated pressure.
	Pinch bars are not parallel or the distance between the bars is too long.	See maintenance instructions HO 001.4.
	Strange object is stuck between the pinch bars.	Remove the object.
	Sleeve is broken or worn out.	Measure the resistance of the sleeve. Change the sleeve. See maintenance instruction HO 001.4.
	Sealing of the actuator piston is leaking.	Change the sealing.
Flow fluid is leaking through the valve body bushings.	Sleeve is broken or worn out.	Change the sleeve.
Process control indicates that the valve does not open or close.	Proximity switch is not functioning or sensors do not signal.	Check the position of sensors and the distance between sensor plates and sensors. (Generally between 5-6 mm, max 8 mm) Remove possible strange objects and dirt from plates/sensors. Check the air supply pressure.

TROUBLE SHOOTING, TUBE LIFE SHORT - VALVE TYPES BE/BO**P**and H**

CHECK PROCESS CONDITIONS	
- Type of slurry, liquid, powder	
- Temperature min/medium/max ºC	
- Max operating pressure (barg)	
- Max pressure when valve is closed (barg)	
If the pipe/valve is washed	
- Type of washing liquid	
- Temperature max ºC	
- Max pressure (barg)	
- Time needed for washing	
CHECK VALVE OPERATING CONDITIONS	
- Valve type and serial no (machine plate)	
- Time in operation	
- Frequency of closing/opening, cycles/h etc	
- Supply air/hydraulic pressure min/max (barg)	
- Valve closing/opening time	
- distance from the previous pipe bend, T-joint	< 2*DN ☐ > 2*DN ☐
CHECK VALVE CONDITION	
- bolts and nuts tightened	
- pull bar locking nut fixed/sealed	
- air/hydraulic connections tight	
- actuator sealings are not leaking	
- Tmin -20ºC,	
- operation of the auxiliaries	
- position of the actuator	Heavy actuators may need support if not vertical
- describe the type of damage in the tube- take photos of the tube or/and sent to RF	

POSSIBLE DEFECT	ACTION
Air /hydraulic pressure in the actuator is too low (also short periods) Or operating pressure higher than rated.	Valve type marking indicates the max rated pressure. - increase supply air pressure - larger actuator may be needed

Valve is closing/opening a long time - during these phases wear is maximum	Check if air/ flow is large enough Installing quick exhaust valves on the air cylinder increases closing/opening speed Closing/opening speeds recommended - 1-3 s when DN ≤ 80 - 3-4 s when DN ≤ 200 - 4-7 s when DN ≤ 400
Valve is closing/opening too quickly - water hammer or pressure blow may result	Throttle/decrease air/hydraulic flow to the valve
Valve is close to the next pipe bend/T-joint - flow is directed on one side of the tube causing uneven wear	Remove the valve farther from the bend/T-joint
Process conditions have changed or are different from assumed	New elastomer quality, pressure rating or opening tags maybe needed.
Adjustment of the pinch bars is wrong	See maintenance instructions
Cylinder sealing is leaking	Change the sealing.

APPENDICES

Bill of Materials

Dimensional “as built” drawings

Accessories