SMARTPAT COND 5200 Technical Datasheet

Digital conductive conductivity sensor for chemical and industrial wastewater industry

- 2-wire loop powered sensor with integrated transmitter technology
- Special graphite electrodes for harsh applications
- Rugged sensor design with integrated temperature sensor

© KROHNE 09/2015 - 4002892501 - TD SMARTPAT COND 5200 R01 en

1 Product features 3

1.1 SMARTPAT conductive conductivity sensor ... 3
1.2 Design and options ... 4
1.3 Conductivity measurement ... 6

2 Technical data 7

2.1 Technical data ... 7
2.2 Dimensions ... 9

3 Installation 11

3.1 General notes on installation ... 11
3.2 Intended use ... 11
3.3 Pre-installation requirements ... 12
3.4 Installation procedure ... 12

4 Electrical connections 13

4.1 Safety instructions ... 13
4.2 Connecting the cable to the sensor ... 13
4.3 Connecting the sensor cable ... 14
4.4 Connection diagram ... 14
4.5 Installing the sensor ... 16
4.5.1 General installation instructions ... 16
4.5.2 Installation recommendation ... 16

5 Order information 19

5.1 Order code ... 19
5.2 Accessories and consumables ... 20

6 Notes 21

1.1 SMARTPAT conductive conductivity sensor

SMARTPAT analytical sensors from KROHNE are the first and only sensor line in the market with integrated transmitter technology. The complete circuitry is miniaturised and fits into the sensor head. This technical achievement cuts the price in half compared to all measurement systems.

KROHNE offers a real open standard without transmitter and a direct connection via standardised fieldbus from the sensor to the process control system. The SMARTPAT sensor stores all data and sends these as bidirectional digital signals with 4...20 mA / HART® 7 protocol to the control and asset management systems, handhelds, PC and other peripherals.

The SMARTPAT COND 5200 meets all requirements of the chemical and industrial wastewater industry.

Figure 1-1: SMARTPAT COND 5200

① VP2 connector
② PEEK Body
③ Process connection: G3/4 A thread (male) or 3/4-14 NPT (male), PVDF
④ Electrodes: graphite, PES

Highlights

- Direct connection via standardised fieldbus
- Easy handling of offline and online configuration via free of charge PACTware™ FDT/DTM
- Different approvals like IECEx, ATEX, QPS and NEPSI are available for installation in hazardous areas.
- Robust sensor design with graphite electrodes for harsh applications in various industries
- High cell constant for a wide measuring range
- Standard process connection for direct installation in pipelines and tanks
- Long lifespan
- With integrated Pt1000 and standard VP2 connector

Industries

- Chemical, petrochemical
- Industrial and municipal wastewater
- Steel and mining
- Pulp and paper
- Water

Applications

- Medium separation
- Industrial and municipal wastewater control and treatment
- Water treatment

1.2 Design and options

SMARTPAT COND 5200 is available with standard process connections in PVDF:

- G3/4 A thread (male)
- 3/4-14 NPT (male)

The electrodes material:

- Graphite and PES

Available cell constant c

- c=1 (10 µS/cm...15 mS/cm at 25°C / 77°F)

Different approvals like IECEx, ATEX, QPS and NEPSI are available for installation in hazardous areas.

The sensor can be integrated into the process control system via PACTware™ FDT/DTM with the open standard in fieldbus systems - HART®.

SMARTPAT COND 5200 is compatible with all 2-wire loop powered displays.

Made to Fit

Mounting assemblies SENSOFIT series

As a complete provider for water analysis, we naturally offer a complete range of assemblies. In addition to immersion assemblies, there is also a range of flow-through assemblies available, in a wide range of materials. Special versions for special operating conditions are available on request.

For the SMARTPAT COND 5200 sensor type the following individual assemblies are available:

- SENSOFIT FLOW 1710 series – Flow-through assemblies

For further information please consider the technical datasheets.

1.3 Conductivity measurement

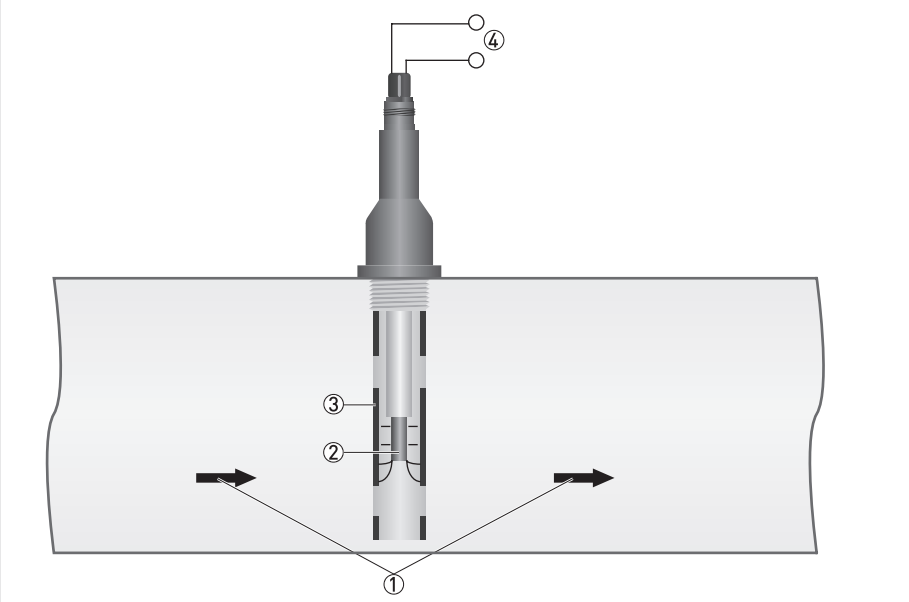

Figure 1-2: Measuring principle for conductivity measurement

① Flow direction
② Inner electrode
③ Outer electrode
④ Power supply

Conductivity is defined as the property of an aqueous solution to conduct electricity by ion transportation. The higher the ion concentration, the more current can flow. Using Ohm's law (Resistance = Voltage/Current) the resistance of a liquid can be determined by measuring the current while keeping voltage constant. Specific conductivity is defined by 1/resistance. The unit of measurement is Siemens and is normally expressed in µS/cm. An important criterion for the measuring range of conductivity cells is the geometry of the electrodes.

There are two rules which are characteristic for conductivity measurement:

1. The larger the distance between the two electrodes, the larger the resistance.
2. The larger the electrode surface, the lower the resistance.

The surface area (A) and the distance (L) must be correctly matched to the desired measuring range. This is called the "cell constant" defined as c=L/A.

2.1 Technical data

- *The following data is provided for general applications. If you require data that is more relevant to your specific application, please contact us or your local sales office.*
- *Additional information (certificates, special tools, software,...) and complete product documentation can be downloaded free of charge from the website (Downloadcenter).*

Measuring system

Measuring principle	Conductivity measurement - conductive
Measuring range	10 µS/cm...15 mS/cm (c=1) at 25°C / 77°F

Design

Temperature sensor	Pt1000
Connector	VarioPin 2.0 (VP2)

Operating conditions

Process temperature	0...+130°C / +32...+266°F
Ambient temperature	-10...+85°C / +14...+185°F
Storage temperature	-40...+85°C / -40...+185°F
Process pressure	16 bar at 25°C / 232 psi at 77°F, 9 bar at 60°C / 130.5 psi at 140°F
Measuring accuracy	±3% of the measured value

Installation conditions

Ingress protection	IP68
Weight	Approx. 153 g / 0.34 lb
Process connection	G3/4 A thread (male) or 3/4-14 NPT (male)

Materials

Process connection	PVDF
Electrodes	Graphite, PES
Sensor head	PEEK body with VP2 connector

Communication

Conductivity range	0.01...15 mS/cm at 25°C / 77°F (for c=1 the displayed unit is mS/cm for conductivity and kOhm*cm for resistivity)
Output signal	4...20 mA (passive)
Output resolution	20 µA
Field communication	HART® 7 - FSK 1200 physical layer definition on top of the current loop
Filter adjustable	1...60 seconds

Electrical connections

Power supply	15...30 VDC loop powered
Output	4...20 mA + HART® protocol
Load	Minimum 0 Ω; maximum R_L = (($U_{ext.}$ - 15 VDC) / 22 mA)
HART®	HART® protocol via current output HART®7
Device revision	1
Physical layer	FSK
Device category	Sensor, galvanically isolated
System requirements	250 Ω loop resistance for HART® communication
Multidrop operation	4 mA In a multidrop communication system, up to 32 devices can be connected. For installation in a multidrop communication system please consider the voltage drop for the 250 Ω loop resistance for HART® communication. The supply voltage has to be adjusted.

Approvals

CE	
This device fulfils the statutory requirements of the EC directives. The manufacturer certifies successful testing of the product by applying the CE mark.	
Electromagnetic compatibility:	Directive 2004/108/EC, NAMUR NE 21
Shock resistance:	IEC 60068-2-31, Environmental testing – Part 2: Test Ec
Ex	IECEx: Ex ia IIC T6...T4
	ATEX: II 1 G Ex ia IIC T6...T4
	NEPSI: Ex ia IIC T6...T4 Ga
	QPS: Class I, Div 1, Groups A-D, T4...T6 Class I, Zone 0, AEx ia IIC T4...T6 Ex ia IIC T4...T6

2.2 Dimensions

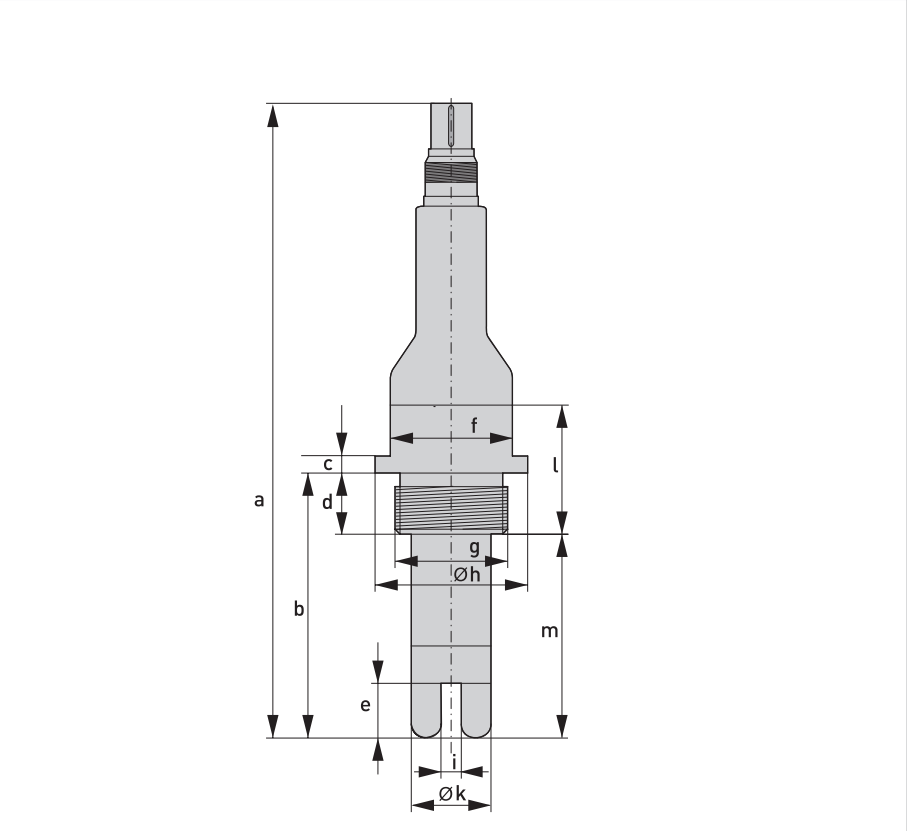

Figure 2-1: SMARTPAT COND 5200

Process connection G3/4 A thread (male)

	Dimensions [mm]	Dimensions [inch]
a	186.2	7.33
b	76	2.99
c	7	0.28
d	16	0.63
e	16.1	0.63
f	WS 36	
g	G3/4 A thread (male)	
h	Ø45	Ø1.77
i	5.6	0.22
k	Ø23.5	Ø0.93
l	38	1.50
m	60	2.36

Process connection 3/4-14 NPT (male)

	Dimensions [mm]	Dimensions [inch]
a	188.2	7.41
b	80	3.15
c	7	0.28
d	20	0.79
e	16.1	0.63
f	WS 36	
g	3/4-14 NPT (male)	
h	Ø45	Ø1.77
i	5.6	0.22
k	Ø23.5	Ø0.93
l	40	1.57
m	60	2.36

3.1 General notes on installation

For devices used in hazardous areas, additional safety notes apply; please refer to the Ex documentation.

All work on the electrical connections may only be carried out with the power disconnected.

Observe the national regulations for electrical installations!

During installation of the device make sure that you use ESD (electrostatic discharge) protection equipment.

Observe without fail the local occupational health and safety regulations. Any work done on the electrical components of the measuring device may only be carried out by properly trained specialists.

Inspect the packaging carefully for damages or signs of rough handling. Report damage to the carrier and to the local office of the manufacturer.

Do a check of the packing list to make sure that you have all the elements given in the order.

Look at the device nameplate to ensure that the device is delivered according to your order.

3.2 Intended use

For devices used in hazardous areas, additional safety notes apply; please refer to the Ex documentation.

Responsibility for the use of the measuring devices with regard to suitability, intended use and corrosion resistance of the used materials against the measured fluid lies solely with the operator.

This device is a Group 1, Class A device as specified within CISPR11:2009. It is intended for use in industrial environment. There may be potential difficulties in ensuring electromagnetic compatibility in other environments, due to conducted as well as radiated disturbances.

The manufacturer is not liable for any damage resulting from improper use or use for other than the intended purpose.

The intended use of the sensor SMARTPAT COND 5200 is the measurement of conductivity in conductive liquids.

3.3 Pre-installation requirements

- *Do not drop the device! Handle the device with care!*
- *Never touch or scratch the electrodes of the sensor.*
- *Store the sensor in its original packaging in a dry, dust-free location. Keep it away from dirt. If necessary, clean it as described in the manual of the sensor.*
- *Do not make any mechanical modifications to the sensor (electrodes shortened, drilled, bent or scratched). This can result in the loss of proper functionality, as well as the rights under the device warranty.*
- *The sensor must be suitable for the temperature, pressure and medium conditions which are specified (including chemical resistance).*

A sensor specific DTM software for usage with PACTware™ FDT is available. The DTM software is free of charge and available from CD (scope of delivery) or can be downloaded from the KROHNE website (Downloadcenter).

The required steps are explained in the following sections.

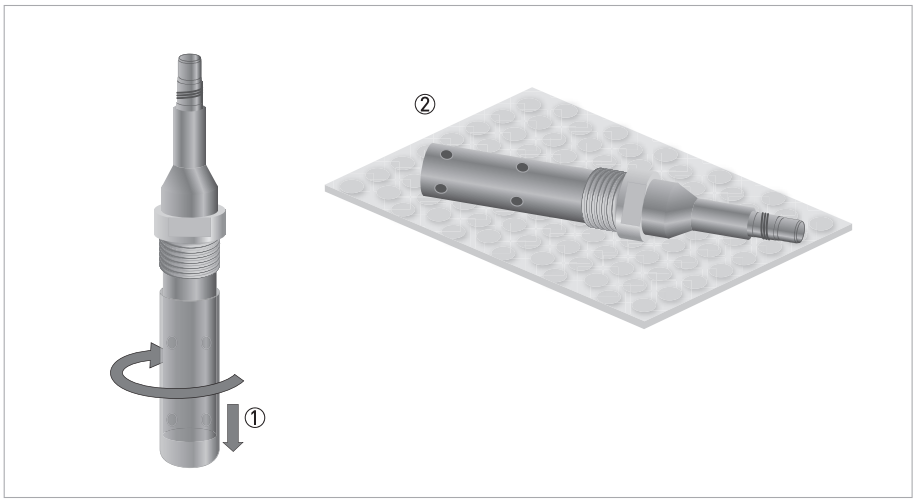

Figure 3-1: Unpacking the sensor

Unpacking the sensor

- Remove by gently twisting and pulling the protective cap from the sensor ①.
- Lay the sensor on a soft ESD mat or soft paper tissue ②.
- Leave the protection cap of the VP connector, as long as the sensor is not connected to the cable.

3.4 Installation procedure

During installation of the device make sure that you use ESD (electrostatic discharge) protection equipment.

① Connect the sensor to the junction box or directly to the process control system.
② Install the sensor into its final measuring location.
③ If necessary re-calibrate the cell constant for your process conditions.

4.1 Safety instructions

For devices used in hazardous areas, additional safety notes apply; please refer to the Ex documentation.

All work on the electrical connections may only be carried out with the power disconnected.

Observe the national regulations for electrical installations!

Observe without fail the local occupational health and safety regulations. Any work done on the electrical components of the measuring device may only be carried out by properly trained specialists.

Look at the device nameplate to ensure that the device is delivered according to your order.

4.2 Connecting the cable to the sensor

During installation of the device make sure that you use ESD (electrostatic discharge) protection equipment.

Moisture on the sensor connector must be avoided! Moisture may cause a short-circuit and a malfuntion of the sensor!
If moisture has entered the connector dry it with air (e.g. hot air gun).

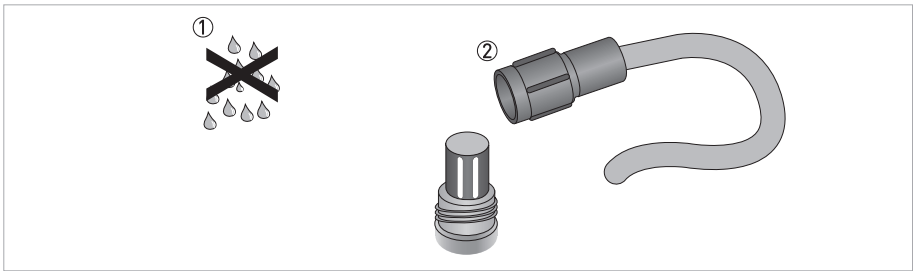

Figure 4-1: Connecting the cable to the sensor

Connecting the cable to the sensor

- Ensure that both cable and sensor connector are absolutely dry ①.
- Screw the cable connector ② on the sensor connector and tighten it by hand. (max. 5 Nm)

4.3 Connecting the sensor cable

All work on the electrical connections may only be carried out with the power disconnected.

The cable glands installed by the manufacturer are designed for a cable diameter of 8 to 13 mm. If you are using cables with a larger diameter, you must replace the manufacturer's cable glands with suitable ones.

Cable VP2-S

Transparent-Black (inner coax shield)	Ub+
White	Ub-
Shield	S

4.4 Connection diagram

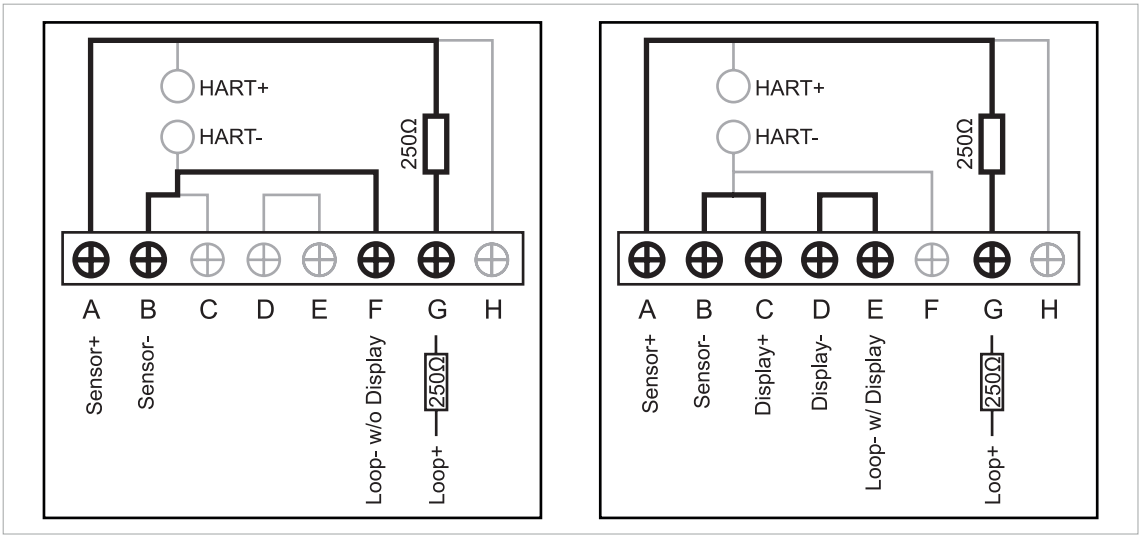

Figure 4-2: SJB 200 W-Ex with SMARTPAT sensor, integrated HART® resistor and without display (left side). SJB 200 W-Ex with SMARTPAT sensor, integrated HART® resistor and display (right side).

SJB 200 W-Ex with SMARTPAT sensor, integrated HART® resistor and without display.		SJB 200 W-Ex with SMARTPAT sensor, integrated HART® resistor and display.	
A	Sensor+ (Ub+)	A	Sensor+ (Ub+)
B	Sensor- (Ub-)	B	Sensor- (Ub-)
F	Loop- w/o Display	C	Display+
G	Loop+ 250Ω	D	Display-
		E	Loop- w/ Display
		G	Loop+ 250Ω

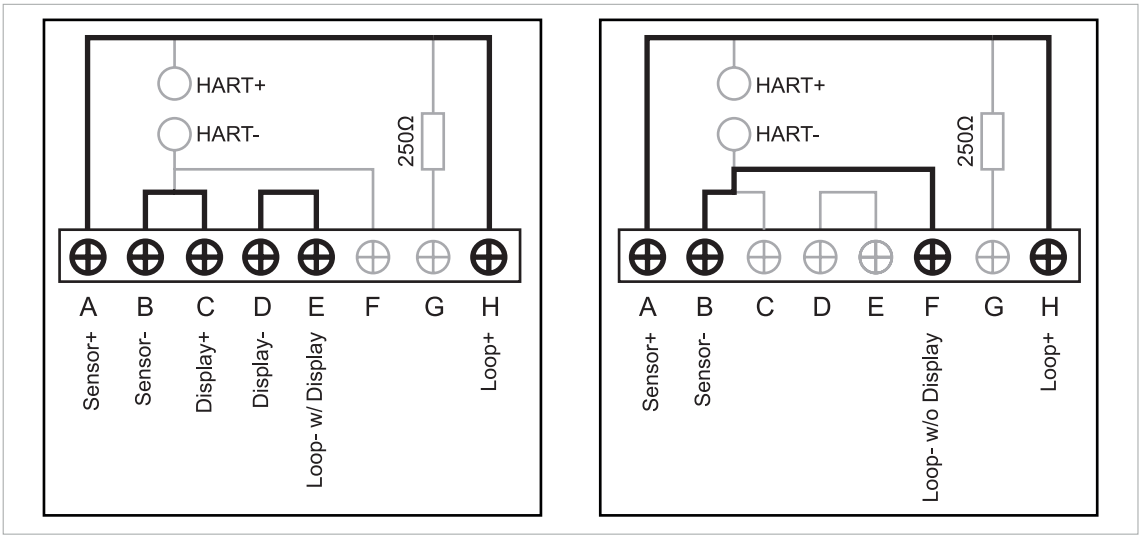

Figure 4-3: SJB 200 W-Ex with SMARTPAT sensor, display and without integrated HART® resistor (left side).
SJB 200 W-Ex with SMARTPAT sensor, without display and integrated HART® resistor (right side)

SJB 200 W-Ex with SMARTPAT sensor, display and without integrated HART® resistor.		SJB 200 W-Ex with SMARTPAT sensor, without display and integrated HART® resistor.	
A	Sensor+ (Ub+)	A	Sensor+ (Ub+)
B	Sensor- (Ub-)	B	Sensor- (Ub-)
C	Display+	F	Loop- w/o Display
D	Display-	H	Loop+
E	Loop- w/ Display		
H	Loop+		

4.5 Installing the sensor

4.5.1 General installation instructions

Ensure that the pipeline is without pressure before installing or removing a sensor!

During installation you should fix a shut-off valve in front of and behind the instrument so that the sensor can be taken out in case of check.

To achieve reliable measuring results, the electrodes must always have full contact with the measuring medium.

Basically any installation position is possible. However, ensure that sufficient medium flows through and around the electrodes (the conductive electrodes must always be completely surrounded by the medium). Structural measures must be taken to prevent flow interruption or gas bubbles.

4.5.2 Installation recommendation

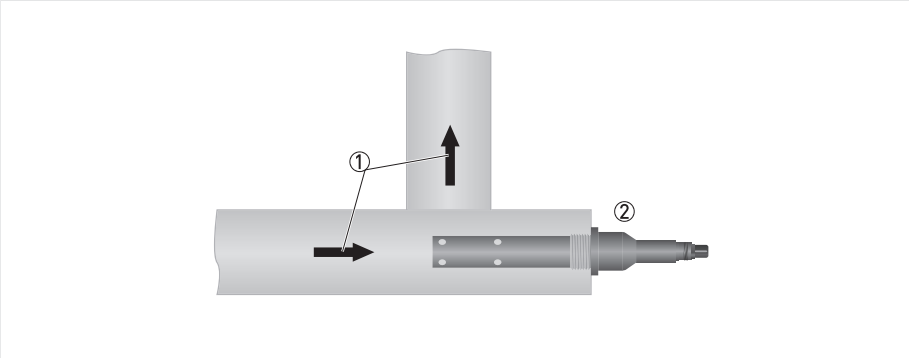

Figure 4-4: Typical installation

① Flow direction
② Ordered sensor

- Installation against the flow to ensure direct exposure of the electrodes.

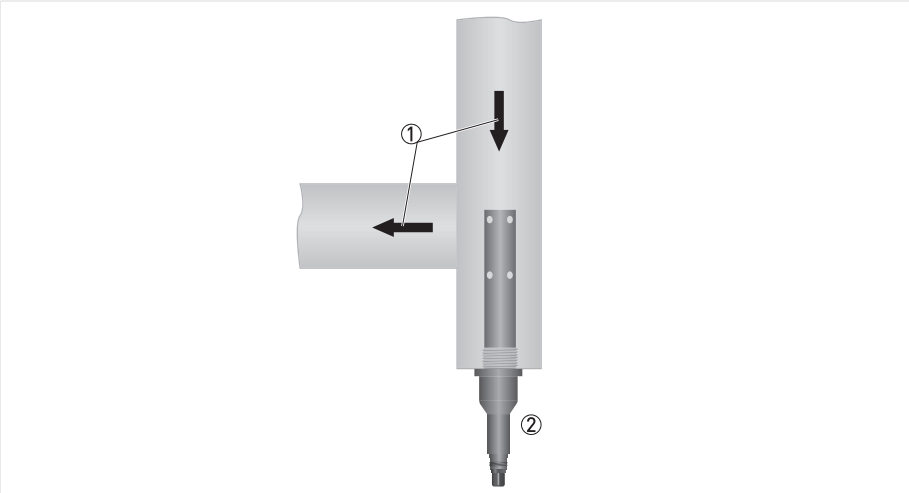

Figure 4-5: Installation for clean water

① Flow direction
② Ordered sensor

- This installation is only recommended if the pipeline is completely filled and if there are no particles or air bubbles in the pipeline.

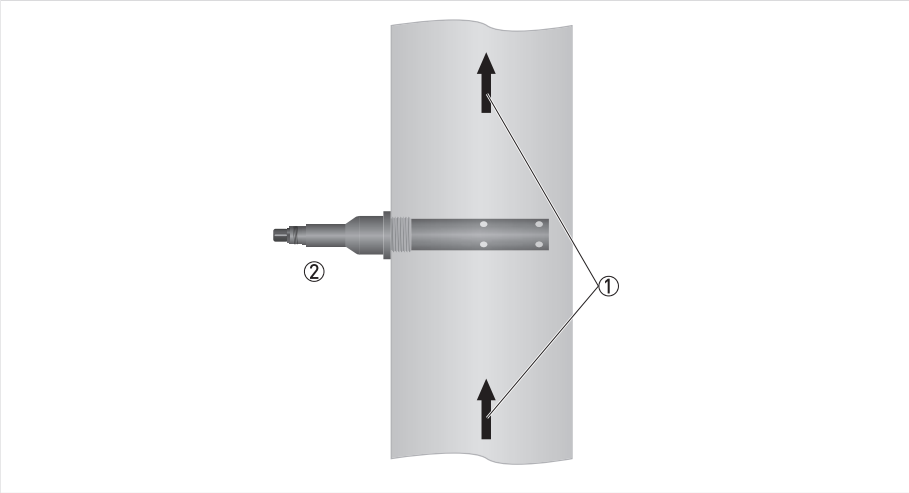

Figure 4-6: Possible installation

① Flow direction
② Ordered sensor

- This installation is only recommended if the pipeline is completely filled and if there are no particles or air bubbles in the pipeline.
- Consider the diameter of the pipeline, i.e. compare pipeline DN with insertion length of the sensor shaft.

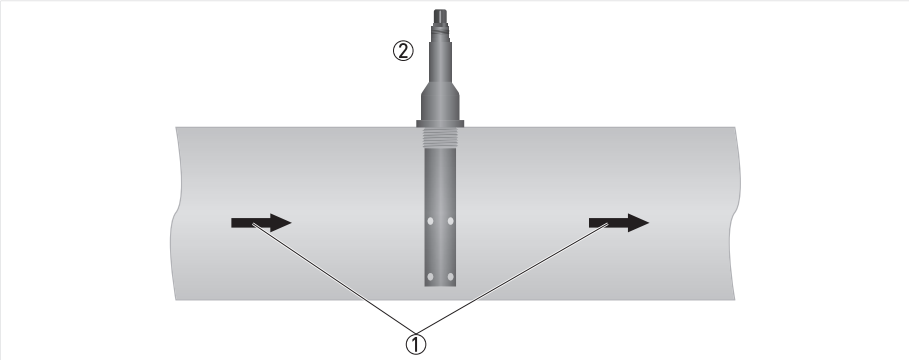

Figure 4-7: Possible installation

① Flow direction
② Ordered sensor

- This installation is only recommended if the pipeline is completely filled and if there are no particles or air bubbles in the pipeline.
- Consider the diameter of the pipeline, i.e. compare pipeline DN with insertion length of the sensor shaft.

5.1 Order code

The characters of the order code highlighted in light grey describe the standard.

VGS C	**4**	**Sensor type**										
		3	SMARTPAT COND 5200									
			Measuring range									
			D	10 µS/cm...15 mS/cm (c=1)								
				Materials								
				2	Process connection: PVDF; Electrodes: graphite, PES							
					Process conditions							
					B	0...+130°C, 16 bar at +25°C / +32...+266°F, 232 psi at +77°F						
						Process connection						
						1	G3/4 A thread (male)					
						2	3/4-14 NPT (male)					
							Insertion length					
							D	60 mm / 2.36"				
								Communication				
								1	4...20 mA / HART®			
									Connector type			
									A	VarioPin (VP2), PEEK		
										Approval		
										0	none	
										1	ATEX	
										2	IECEx	
										3	QPS	
										4	NEPSI	
											Documentation	
											0	none
											1	English
											2	German
											3	French
											4	Spanish
											5	Italian
											6	Turkish
												Material certification
												0 none
VGS C	**4**											

5.2 Accessories and consumables

Accessories	Order code
Cable	
Cable VP2-S-PEEK-3 (3 m / 9.84 ft)	XGA W 080070
Cable VP2-S-PEEK-5 (5 m / 16.4 ft)	XGA W 080080
Cable VP2-S-PEEK-10 (10 m / 32.8 ft)	XGA W 080090
Cable VP2-S-PEEK-15 (15 m / 49.2 ft)	XGA W 080100
Cable VP2-S-PEEK-20 (20 m / 65.6 ft)	XGA W 080110
Cable VP2-S-PEEK-30 (30 m / 98.4 ft)	XGA W 080120
Junction box	
SJB 200 W-Ex - Junction box for connecting sensor with process control system, Ex	XGA S 080013
Connecting cable M12 - Cable with M12 cable connector for connecting HART® handheld (e.g. Emerson 475 FIELD COMMUNICATOR) to SJB 200 W-Ex junction box	XGA S 080014
USB interface cable	
OPTIBRIDGE - USB interface cable with stainless steel housing and various adapter cables for SMARTPAT sensors	See technical datasheet OPTIBRIDGE
SMARTBRIDGE - USB interface cable with plastic housing for SMARTPAT sensors	XGA S 080010
FSK USBeX - USB interface cable for SMARTPAT sensors, Ex (additional Ex-isolating amplifier required)	XGA S 080015
Display	
SD 200 W - Indicator for SMARTPAT sensors, wall mount	VGSD 4 1A2A2A200
SD 200 R - Indicator for SMARTPAT sensors, rack mount	VGSD 4 2A3A0A000
SD 200 W-EX - Indicator for SMARTPAT sensors, wall mount, Ex	VGSD 4 1A2A2A2C0
SD 200 R-EX - Indicator for SMARTPAT sensors, rack mount, Ex	VGSD 4 2A3A0A0C0

Consumables	Order code
Standard solution for conductivity calibration	
Conductivity standard solution 0.015 mS/cm - 1 x 250 ml (glass bottle)	XGA S 030010
Conductivity standard solution 0.147 mS/cm - 1 x 250 ml (glass bottle)	XGA S 030020
Conductivity standard solution 1.413 mS/cm - 1 x 250 ml	XGA S 030030

KROHNE – Process instrumentation and measurement solutions

- Flow
- Level
- Temperature
- Pressure
- Process Analysis
- Services

Head Office KROHNE Messtechnik GmbH
Ludwig-Krohne-Str. 5
47058 Duisburg (Germany)
Tel.: +49 203 301 0
Fax: +49 203 301 10389
info@krohne.com

The current list of all KROHNE contacts and addresses can be found at:
www.krohne.com

KROHNE

© KROHNE 09/2015 - 4002892501 - TD SMARTPAT COND 5200 R01 en - Subject to change without notice.