KROHNE

Operating Instructions
OPTISWITCH 5200 C, 5250 C

Transistor (NPN/PNP)

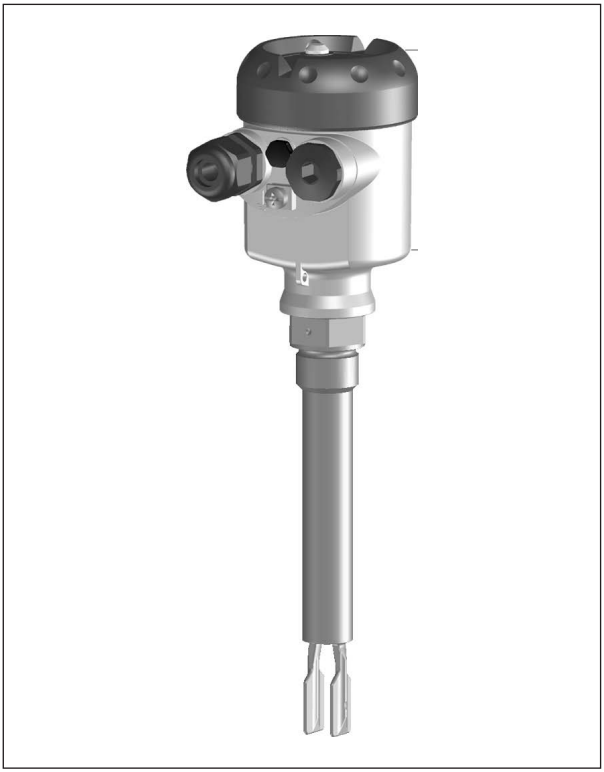

Document
ID: 30432

- Variable area flowmeters
- Vortex flowmeters
- Flow controllers
- Electromagnetic flowmeters
- Ultrasonic flowmeters
- Mass flowmeters
- **Level measuring instruments**
- Communications engineering
- Engineering systems & solutions
- Switches, counters, displays and recorders
- Heat metering
- Pressure and temperature

Contents

1 About this document
1.1 Function ... 3
1.2 Target group ... 3
1.3 Symbols used ... 3

2 For your safety
2.1 Authorised personnel ... 4
2.2 Appropriate use ... 4
2.3 Warning about incorrect use ... 4
2.4 General safety instructions ... 4
2.5 Safety label on the instrument ... 5
2.6 CE conformity ... 5
2.7 SIL conformity ... 5
2.8 Safety instructions for Ex areas ... 5

3 Product description
3.1 Configuration ... 6
3.2 Principle of operation ... 7
3.3 Operation ... 7
3.4 Storage and transport ... 8

4 Mounting
4.1 General instructions ... 9
4.2 Mounting instructions ... 12

5 Connecting to power supply
5.1 Preparing the connection ... 15
5.2 Connection procedure ... 15
5.3 Wiring plan, single chamber housing ... 16

6 Setup
6.1 General information ... 19
6.2 Adjustment elements ... 19
6.3 Function chart ... 20

7 Maintenance and fault rectification
7.1 Maintenance ... 22
7.2 Rectify faults ... 22
7.3 Exchanging the electronics ... 23
7.4 Instrument repair ... 24

8 Dismount
8.1 Dismounting steps ... 25
8.2 Disposal ... 25

9 Supplement
9.1 Technical data ... 26
9.2 Dimensions ... 32

30432-EN-141015

Editing status: 2014-10-08

1 About this document

1.1 Function

This operating instructions manual provides all the information you need for mounting, connection and setup as well as important instructions for maintenance and fault rectification. Please read this information before putting the instrument into operation and keep this manual accessible in the immediate vicinity of the device.

1.2 Target group

This operating instructions manual is directed to trained specialist personnel. The contents of this manual should be made available to these personnel and put into practice by them.

1.3 Symbols used

Information, tip, note
This symbol indicates helpful additional information.

Caution: If this warning is ignored, faults or malfunctions can result.

Warning: If this warning is ignored, injury to persons and/or serious damage to the instrument can result.

Danger: If this warning is ignored, serious injury to persons and/or destruction of the instrument can result.

Ex applications
This symbol indicates special instructions for Ex applications.

SIL applications
This symbol indicates instructions for functional safety which must be taken into account particularly for safety-relevant applications.

- **List**
  The dot set in front indicates a list with no implied sequence.

→ **Action**
This arrow indicates a single action.

1 **Sequence of actions**
Numbers set in front indicate successive steps in a procedure.

Battery disposal
This symbol indicates special information about the disposal of batteries and accumulators.

2 For your safety

2.1 Authorised personnel

All operations described in this operating instructions manual must be carried out only by trained specialist personnel authorised by the plant operator.

During work on and with the device the required personal protective equipment must always be worn.

2.2 Appropriate use

The OPTISWITCH 5200 C, 5250 C is a sensor for point level detection.

You can find detailed information about the area of application in chapter "*Product description*".

Operational reliability is ensured only if the instrument is properly used according to the specifications in the operating instructions manual as well as possible supplementary instructions.

For safety and warranty reasons, any invasive work on the device beyond that described in the operating instructions manual may be carried out only by personnel authorised by the manufacturer. Arbitrary conversions or modifications are explicitly forbidden.

2.3 Warning about incorrect use

Inappropriate or incorrect use of the instrument can give rise to application-specific hazards, e.g. vessel overfill or damage to system components through incorrect mounting or adjustment.

2.4 General safety instructions

This is a state-of-the-art instrument complying with all prevailing regulations and guidelines. The instrument must only be operated in a technically flawless and reliable condition. The operator is responsible for the trouble-free operation of the instrument.

During the entire duration of use, the user is obliged to determine the compliance of the necessary occupational safety measures with the current valid rules and regulations and also take note of new regulations.

The safety instructions in this operating instructions manual, the national installation standards as well as the valid safety regulations and accident prevention rules must be observed by the user.

For safety and warranty reasons, any invasive work on the device beyond that described in the operating instructions manual may be carried out only by personnel authorised by the manufacturer. Arbitrary conversions or modifications are explicitly forbidden.

The safety approval markings and safety tips on the device must also be observed.

30432-EN-141015

2.5 Safety label on the instrument

The safety approval markings and safety tips on the device must be observed.

2.6 CE conformity

This device fulfills the legal requirements of the applicable EC guidelines. By attaching the CE mark, we provide confirmation of successful testing.

2.7 SIL conformity

OPTISWITCH 5200 C, 5250 C fulfills the requirements on functional safety according to IEC 61508 resp. IEC 61511. You can find further information in the Safety Manual "*OPTISWITCH 5XXX*".

2.8 Safety instructions for Ex areas

Please note the Ex-specific safety information for installation and operation in Ex areas. These safety instructions are part of the operating instructions manual and come with the Ex-approved instruments.

3 Product description

3.1 Configuration

Scope of delivery

The scope of delivery encompasses:

- OPTISWITCH 5200 C, 5250 C point level switch
- Documentation
  - this operating instructions manual
  - Safety Manual "*Functional safety (SIL)*" (optional)
  - Ex-specific "*Safety instructions*" (with Ex versions)

Constituent parts

The OPTISWITCH 5200 C, 5250 C consists of the components:

- Housing lid
- Housing with electronics
- Process fitting with tuning fork

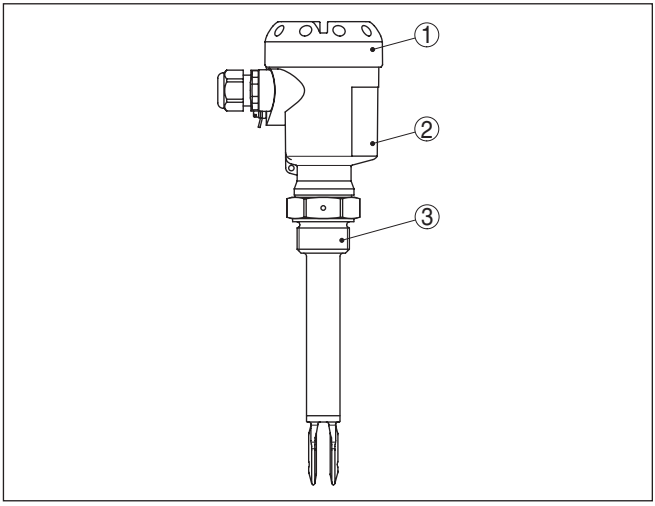

Fig. 1: OPTISWITCH 5200 C, 5250 C - with plastic housing

1 Housing lid
2 Housing with electronics
3 Process fitting

Type label

The type label contains the most important data for identification and use of the instrument:

- Article number
- Serial number
- Technical data
- Article numbers, documentation
- SIL identification (with SIL rating ex works)

In addition to the type label outside on the instrument, you find the serial number also inside the instrument.

30432-EN-141015

3.2 Principle of operation

Application area

OPTISWITCH 5200 C, 5250 C is a point level sensor with tuning fork for point level detection.

It is designed for industrial use in all areas of process technology and can be used in liquids.

Typical applications are overfill and dry run protection. With its tuning fork of only 40 mm length, OPTISWITCH 5200 C, 5250 C can also be mounted e.g. in pipelines from DN 32. The small tuning fork allows use in vessels, tanks and pipes. Thanks to its simple and robust measuring system, OPTISWITCH 5200 C, 5250 C is virtually unaffected by the chemical and physical properties of the liquid.

It functions even under difficult conditions such as turbulence, air bubbles, foam generation, buildup, strong external vibration or changing products.

Function monitoring
The electronics module of OPTISWITCH 5200 C, 5250 C continuously monitors the following criteria via frequency evaluation:

- Strong corrosion or damage on the tuning fork
- Loss of vibration
- Line break to the piezo drive

If a malfunction is detected or in case of power failure, the electronics takes on a defined switching condition, i.e. the output is open (safe state).

Functional principle

The tuning fork is piezoelectrically energised and vibrates at its mechanical resonance frequency of approx. 1200 Hz. The piezos are fixed mechanically and are hence not subject to temperature shock limitations. The frequency changes when the tuning fork is covered by the medium. This change is detected by the integrated electronics module and converted into a switching command.

Voltage supply

OPTISWITCH 5200 C, 5250 C is a compact instrument, i.e. it can be operated without external evaluation system. The integrated electronics evaluates the level signal and outputs a switching signal. With this switching signal, a connected device can be operated directly (e.g. a warning system, a pump etc.).

The data for power supply are specified in chapter "*Technical data*".

3.3 Operation

The switching condition of OPTISWITCH 5200 C, 5250 C with plastic housing can be checked when the housing is closed (signal lamp). With the basic setting, products with a density ≥ 0.7 g/cm^3 (0.025 lbs/in^3) can be detected. The instrument can be adapted if products with lower density are to be measured.

On the electronics module you will find the following display and adjustment elements:

- Signal lamp for indication of the switching condition (green/red)
- DIL switch for sensitivity adjustment

- Mode adjustment for selection of the switching condition (A/B)

3.4 Storage and transport

Packaging

Your instrument was protected by packaging during transport. Its capacity to handle normal loads during transport is assured by a test based on ISO 4180.

The packaging of standard instruments consists of environment-friendly, recyclable carton material. The sensing element is additionally protected with a cardboard cover. For special versions, PE foam or PE foil is also used. Please dispose of the packaging material through specialised recycling companies.

Transport

Transport must be carried out in due consideration of the notes on the transport packaging. Nonobservance of these instructions can cause damage to the device.

Transport inspection

The delivery must be checked for completeness and possible transit damage immediately at receipt. Ascertained transit damage or concealed defects must be appropriately dealt with.

Storage

Up to the time of installation, the packages must be left closed and stored according to the orientation and storage markings on the outside.

Unless otherwise indicated, the packages must be stored only under the following conditions:

- Not in the open
- Dry and dust free
- Not exposed to corrosive media
- Protected against solar radiation
- Avoiding mechanical shock and vibration

Storage and transport temperature

- Storage and transport temperature see chapter "*Supplement - Technical data - Ambient conditions*"
- Relative humidity 20 … 85 %

4 Mounting

4.1 General instructions

Suitability for the process conditions

Make sure that all parts of the instrument coming in direct contact with the process, especially the sensor element, process seal and process fitting, are suitable for the existing process conditions, such as process pressure, process temperature as well as the chemical properties of the medium.

You can find the specifications in chapter "*Technical data*" and on the nameplate.

Switching point

In general, OPTISWITCH 5200 C, 5250 C can be installed in any position. The instrument only has to be mounted in such a way that the tuning fork is at the height of the desired switching point.

The tuning fork has lateral markings (notches) that indicate the switching point with vertical mounting. The switching point applies to water in conjunction with the basic setting of the density switch ≥ 0.7 g/cm³ (0.025 lbs/in³). When mounting OPTISWITCH 5200 C, 5250 C, make sure that this marking is at the height of the requested switching point. Keep in mind that the switching point of the instrument will shift if the medium has a density other than water - water is 1 g/cm³ (0.036 lbs/in³). For products ≤ 0.7 g/cm³ (0.025 lbs/in³) and ≥ 0.5 g/cm³ (0.018 lbs/in³) the density switch must be set to ≥ 0.5 g/cm³.

Keep in mind that foams with a density ≥ 0.45 g/cm³ (0.016 lbs/in³) are detected by the sensor. This can lead to erroneous switchings, particulary when the sensor is used for dry run protection.

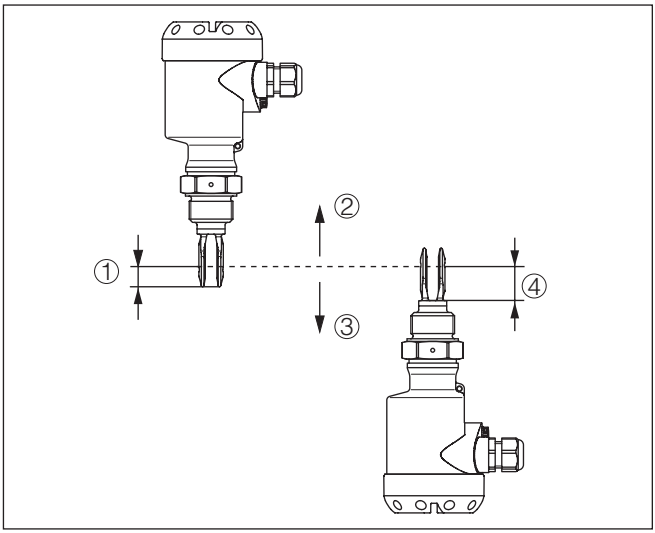

Fig. 2: Vertical mounting

1 Switching point approx. 13 mm (0.51 in)
2 Switching point with lower density
3 Switching point with higher density
4 Switching point approx. 27 mm (1.06 in)

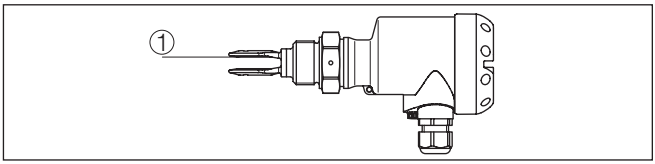

Fig. 3: Horizontal mounting

1 Switching point

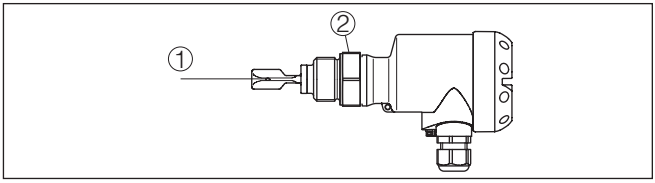

Fig. 4: Horizontal installation (recommended mounting position, particularly for adhesive products)

1 Switching point
2 Marking on top with threaded versions, marking aligned to flange holes with flange versions

With flange versions, the fork is aligned to the flange holes as follows.

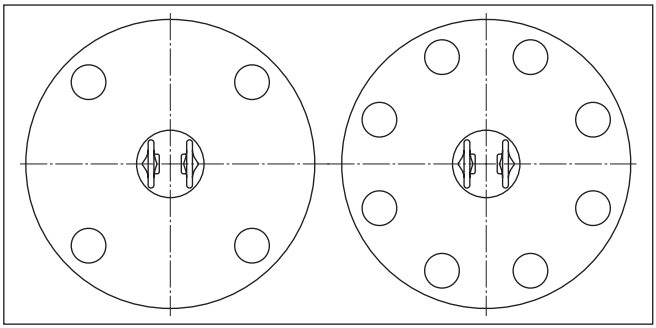

Fig. 5: Fork position with flange versions

Moisture

Use the recommended cables (see chapter "*Connecting to power supply*") and tighten the cable gland.

You can give your OPTISWITCH 5200 C, 5250 C additional protection against moisture penetration by leading the connection cable downward in front of the cable entry. Rain and condensation water can thus drain off. This applies mainly to outdoor mounting as well as installation in areas where high humidity is expected (e.g. through cleaning processes) or on cooled or heated vessels.

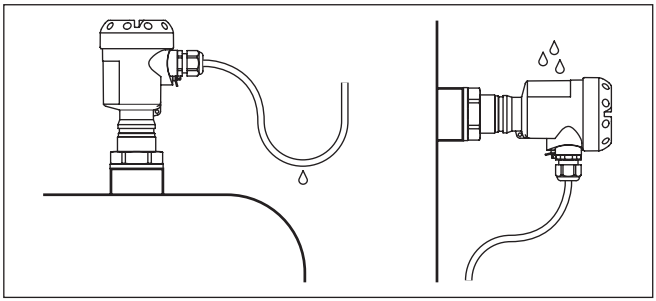

Fig. 6: Measures against moisture ingress

Transport

Caution:
Do not hold OPTISWITCH 5200 C, 5250 C on the tuning fork. Particularly with flange or tube versions, the tuning fork can be damaged just by the weight of the instrument. Transport coated instruments very carefully and avoid touching the tuning fork.

Remove the packaging or the protective cover just before installation.

Pressure/Vacuum

The process fitting must be sealed if there is gauge or low pressure in the vessel. Before use, check if the seal material is resistant against the measured product and the process temperature.

The max. permissible pressure is specified in chapter "*Technical data*" or on the type label of the sensor.

Handling

The vibrating level switch is a measuring instrument and must be treated accordingly. Bending the vibrating element will destroy the instrument.

Warning:
The housing must not be used to screw the instrument in! Applying tightening force can damage internal parts of the housing.

Use the hexagon above the thread for screwing in.

4.2 Mounting instructions

Welding socket

OPTISWITCH 5200 C, 5250 C has a defined thread starting point. This means that every OPTISWITCH 5200 C, 5250 C is in the same fork position after being screwed in. Remove therefore the supplied seal from the thread of OPTISWITCH 5200 C, 5250 C. This seal is not required when using a welded socket with O-ring in front.

Keep in mind that this welded socket is not suitable for coated instrument versions.

Screw OPTISWITCH 5200 C, 5250 C completely into the welded socket. The later position can be determined already before welding. Mark the appropriate position of the welded socket. Before welding, unscrew OPTISWITCH 5200 C, 5250 C and remove the rubber ring from the welded socket. The welded socket has a marking (notch). Weld the socket with the notch facing upward, or in case of pipelines (DN 32 up to DN 50), aligned with the direction of flow.

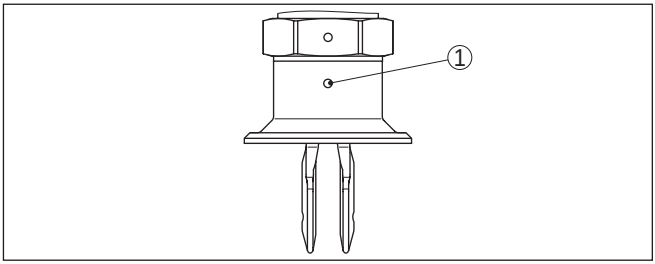

Fig. 7: Marking on the welded socket

1 Marking

Adhesive products

In case of horizontal mounting in adhesive and viscous products, the surfaces of the tuning fork should be vertical in order to reduce buildup on the tuning fork. On the screwed version you will find a marking on the hexagon. With this you can check the position of the tuning fork when screwing it in. When the hexagon touches the seal, the thread can still be turned by approx. half a turn. This is sufficient to reach the recommended installation position.

In the case of flange versions, the fork is aligned with the flange holes.

When used in adhesive and viscous products, the tuning fork should protrude into the vessel to avoid buildup. For that reason, sockets for flanges and mounting bosses should be avoided when mounting horizontally.

30432-EN-141015

Inflowing medium

If OPTISWITCH 5200 C, 5250 C is mounted in the filling stream, unwanted false measurement signals can be generated. For this reason, mount OPTISWITCH 5200 C, 5250 C at a position in the vessel where no disturbances, e.g. from filling openings, agitators, etc., can occur.

This applies particularly to instrument types with long extension tube.

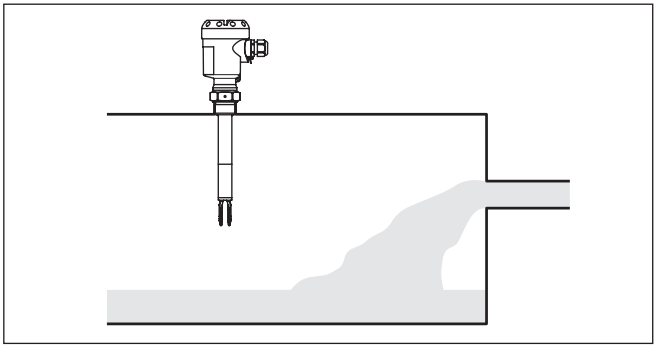

Fig. 8: Inflowing medium

Product flow

To make sure the tuning fork of OPTISWITCH 5200 C, 5250 C generates as little resistance as possible to product flow, mount the sensor so that the surfaces are parallel to the product movement.

Agitators

Due to agitators, vibrations or similar, the level switch can be subjected to strong lateral forces. For this reason, do not use an overly long extension tube for OPTISWITCH 5200 C, 5250 C, but check if you can mount an OPTISWITCH 5100 C, 5150 C level switch on the side of the vessel in horizontal position.

Extreme vibration caused by the process or the equipment, e.g. agitators or turbulence in the vessel, can cause the extension tube of OPTISWITCH 5200 C, 5250 C to vibrate in resonance. This leads to increased stress on the upper weld joint. Should a longer tube version be necessary, you can provide a suitable support directly above the tuning fork to secure the extension tube.

This measure applies mainly to applications in Ex areas category 1G or WHG. Make sure that the tube is not subject to bending stress due to this measure.

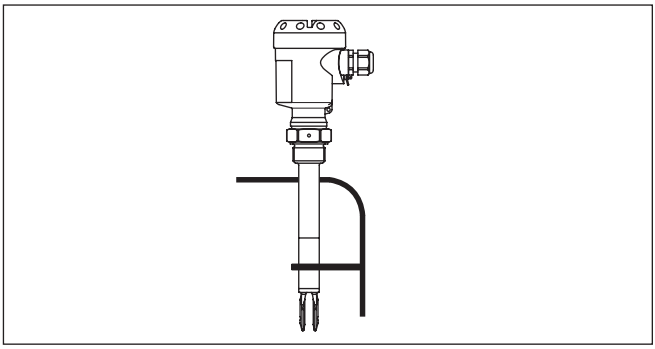

Fig. 9: Lateral suppot of OPTISWITCH 5200 C, 5250 C

Gas-tight leadthrough

The second seal of the gas-tight leadthrough (option) prevents an uncontrolled leakage of the medium. The service life of the gas-tight leadthrough depends on the chemical resistance of the materials. See "*Technical data*".

Caution:
If it is determined (e.g. via an error message from OPTISWITCH 5200 C, 5250 C) that medium has already penetrated into the vibrating element, the instrument must be exchanged immediately.

5 Connecting to power supply

5.1 Preparing the connection

Note safety instructions

Always keep in mind the following safety instructions:

Warning:
Connect only in the complete absence of line voltage.

- The electrical connection must only be carried out by trained personnel authorised by the plant operator.
- Always switch off power supply, before connecting or disconnecting the instrument.

Take note of safety instructions for Ex applications

In hazardous areas you must take note of the respective regulations, conformity and type approval certificates of the sensors and power supply units.

Voltage supply

Connect the voltage supply according to the following diagrams. Take note of the general installation regulations. As a rule, connect OPTISWITCH 5200 C, 5250 C to vessel ground (PA), or in case of plastic vessels, to the next ground potential. On the side of the instrument housing there is a ground terminal between the cable entries. This connection serves to drain off electrostatic charges. In Ex applications, the installation regulations for hazardous areas must be given priority.

The data for power supply are specified in chapter "*Technical data*".

Connection cable

The instrument is connected with standard two-wire cable without screen. If electromagnetic interference is expected which is above the test values of EN 61326 for industrial areas, screened cable should be used.

Use cable with round cross-section. A cable outer diameter of 5 … 9 mm (0.2 … 0.35 in) ensures the seal effect of the cable gland. If you are using cable with a different diameter or cross-section, exchange the seal or use a suitable cable gland.

In hazardous areas, use only approved cable connections for OPTISWITCH 5200 C, 5250 C.

Connection cable for Ex applications

Take note of the corresponding installation regulations for Ex applications.

Cover all housing openings conforming to standard according to EN 60079-1.

5.2 Connection procedure

With Ex instruments, the housing cover may only be opened if there is no explosive atmosphere present.

Proceed as follows:

1. Unscrew the housing cover
2. Loosen compression nut of the cable entry gland
3. Remove approx. 10 cm (4 in) of the cable mantle, strip approx. 1 cm (0.4 in) of insulation from the ends of the individual wires

4. Insert the cable into the sensor through the cable entry
5. Open the terminals with a screwdriver
6. Insert the wire ends into the open terminals according to the wiring plan
7. Tighten the terminals with a screwdriver
8. Check the hold of the wires in the terminals by lightly pulling on them
9. Tighten the compression nut of the cable entry gland. The seal ring must completely encircle the cable
10. Screw the housing lid back on

The electrical connection is finished.

5.3 Wiring plan, single chamber housing

The following illustrations apply to the non-Ex as well as to the Ex-d version.

Housing overview

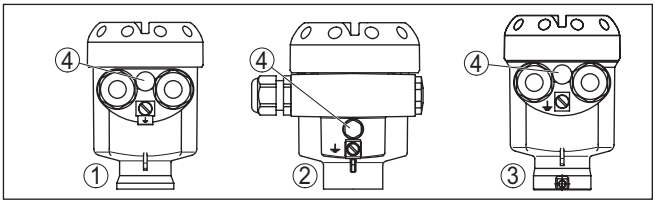

Fig. 10: Material versions, single chamber housing

1 Plastic (not with EEx d)
2 Aluminium
3 Stainless steel (not with EEx d)
4 Filter element for pressure compensation (not with EEx d)

Electronics and terminal compartment

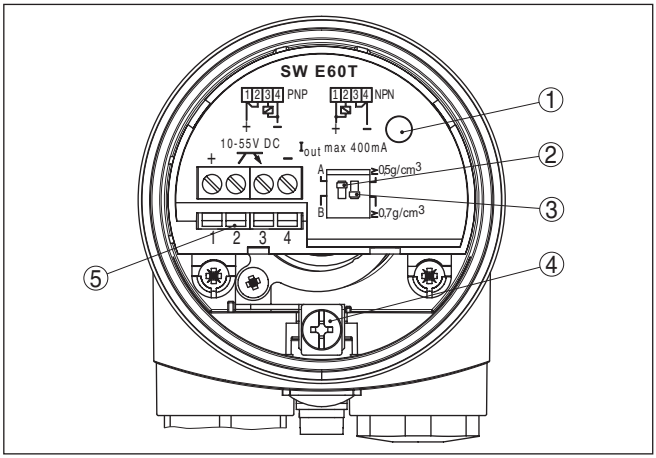

Fig. 11: Electronics and terminal compartment, single chamber housing

1 Control lamp
2 DIL switch for mode adjustment
3 DIL switch for switching point adaptation
4 Ground terminal
5 Connection terminals

Wiring plan

We recommend connecting OPTISWITCH 5200 C, 5250 C in such a way that the switching circuit is open when there is a level signal, line break or failure (safe state).

The instrument is used to control relays, contactors, magnet valves, warning lights, horns as well as PLC inputs.

Caution:
There is no reverse polarity protection. Take note of the polarity of the output lines.

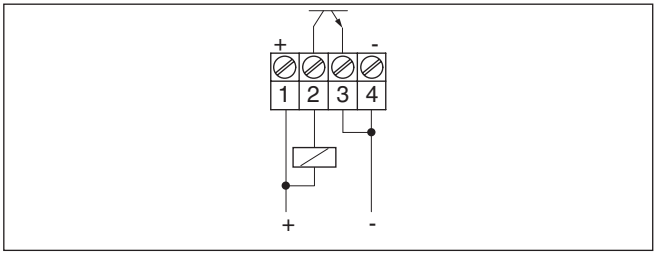

Fig. 12: NPN action

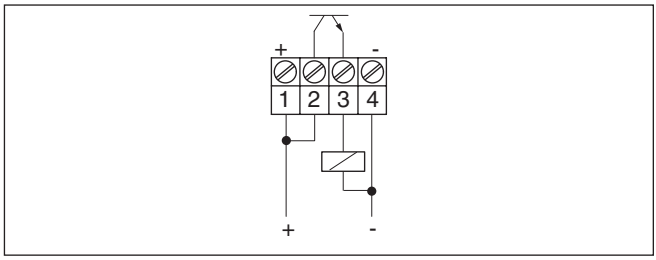

Fig. 13: PNP action

6 Setup

6.1 General information

The figures in brackets refer to the following illustrations.

Function/Configuration

With plastic housings, the switching condition of the electronics can be checked when the housing cover is closed (control lamp). With the basic setting, products with a density ≥ 0.7 g/cm³ (0.025 lbs/in³) can be detected. For products with lower density, the switch must be set to ≥ 0.5 g/cm³ (0.018 lbs/in³).

On the electronics module you will find the following display and adjustment elements:

- Signal lamp (1)
- DIL switch for mode adjustment - A/B (2)
- DIL switch for sensitivity adjustment (3)

Note:
Always immerse the tuning fork of OPTISWITCH 5200 C, 5250 C in a liquid to test its function. Do not test the function of OPTISWITCH 5200 C, 5250 C with your hand. This can damage the sensor.

6.2 Adjustment elements

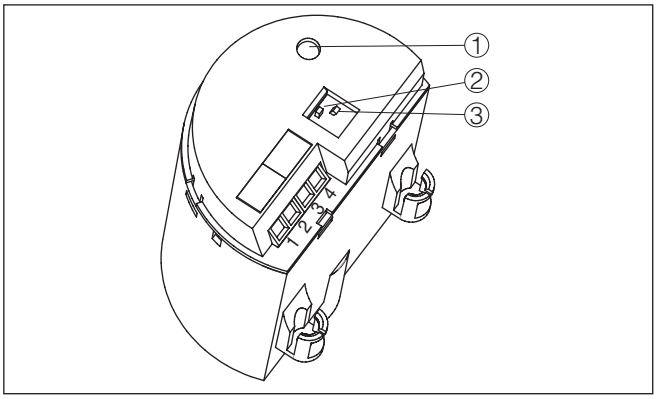

Fig. 14: Oscillator SWE60T - Transistor output

1 Control lamp (LED)
2 DIL switch for mode adjustment
3 DIL switch for sensitivity adjustment

Signal lamp (1)

Control lamp for indication of the switching status

- Green = Output closed
- Red = Output open
- red (flashing) = failure

Mode adjustment (2)

With the mode adjustment (A/B) you can change the switching condition of the relay. You can set the required mode according to the

"*Function chart*" (A - max. detection or overflow protection, B - min. detection or dry run protection).

Sensitivity adjustment (3) With this DIL switch (3) you can set the switching point to liquids having a density between 0.5 and 0.7 g/cm³ (0.018 and 0.025 lbs/in³). With the basic setting, liquids with a density of ≥ 0.7 g/cm³ (0.025 lbs/in³) can be detected. In liquids with lower density, you must set the switch to ≥ 0.5 g/cm³ (0.018 lbs/in³). The specifications for the position of the switching point relate to water - density value 1 g/cm³ (0.036 lbs/in³). In products with a different density, the switching point will shift in the direction of the housing or tuning fork end depending on the density and type of installation.

Note:
Keep in mind that foams with a density ≥ 0.45 g/cm³ (0.016 lbs/in³) are detected by the sensor. This can lead to erroneous switchings, particulary when the sensor is used for dry run protection.

6.3 Function chart

The following chart provides an overview of the switching conditions depending on the set mode and the level.

	Level	Switching status	Control lamp
Mode A Overflow protection		closed	☼ Green
Mode A Overflow protection		open	☼ Red
Mode B Dry run protection		closed	☼ Green
Mode B Dry run protection		open	☼ Red
Failure of the supply voltage (mode A/B)	any	open	○

	Level	Switching status	Control lamp
Fault	any	open	flashes red

7 Maintenance and fault rectification

7.1 Maintenance

If the instrument is used properly, no special maintenance is required in normal operation.

7.2 Rectify faults

Reaction when malfunctions occur

The operator of the system is responsible for taking suitable measures to rectify faults.

Causes of malfunction

OPTISWITCH 5200 C, 5250 C offers maximum reliability. Nevertheless, faults can occur during operation. These may be caused by the following, e.g.:

- Sensor
- Process
- Voltage supply
- Signal processing

Fault rectification

The first measure to take is to check the output signal. In many cases, the causes can be determined this way and the faults quickly rectified.

Checking the switching signal

Error	Cause	Rectification
OPTISWITCH 5200 C, 5250 C signals "covered" without being submerged (overfill protection) OPTISWITCH 5200 C, 5250 C signals "uncovered" when being submerged (dry run protection)	Operating voltage too low	Check operating voltage
	Electronics defective	Press the mode switch. If the instrument then changes the mode, the vibrating element may be covered with buildup or mechanically damaged. Should the switching function in the correct mode still be faulty, return the instrument for repair.
		Press the mode switch. If the instrument then does not change the mode, the electronics module may be defective. Exchange the electronics module.
	Unfavourable installation location	Mount the instrument at a location in the vessel where no dead zones or air bubbles can form.
	Buildup on the vibrating element	Check the vibrating element and the sensor for buildup and remove the buildup if there is any.
	Wrong mode selected	Set the correct mode with the mode switch (overflow protection, dry run protection). Wiring should be carried out according to the closed-circuit principle.
Signal lamp flashes red	Error on the vibrating element	Check if the vibrating element is damaged or extremely corroded.
	Interference on the electronics module	Exchanging the electronics module
	instrument defective	Exchange the instrument or send it in for repair

Reaction after fault rectification

Depending on the reason for the fault and the measures taken, the steps described in chapter "*Set up*" may have to be carried out again.

7.3 Exchanging the electronics

If the electronics module is defective, it can be replaced by the user.

In Ex applications only an electronics module with respective Ex approval may be used.

You can find all the information you need to carry out an electronics exchange in the handbook of the new electronics module.

In general, all electronics modules of series SW60 can be interchanged. If you want to use an electronics module with a different signal output, you carry out the complete setup. You find the necessary, suitable operating instruction on our homepage.

Note:
Keep in mind that enamelled instrument versions need special electronics modules. These electronics modules are called SW60E or SW60E1.

7.4 Instrument repair

If a repair is necessary, please proceed as follows:

On our homepage in the Internet under

http://www.krohne-mar.com/fileadmin/

media-lounge/PDF-Download/Specimen_e.pdf

you can download a return form.

By doing this you help us carry out the repair quickly and without having to call back for needed information.

- Print and fill out one form per instrument
- Clean the instrument and pack it damage-proof
- Attach the completed form and possibly also a safety data sheet to the instrument

8 Dismount

8.1 Dismounting steps

Warning:
Before dismounting, be aware of dangerous process conditions such as e.g. pressure in the vessel, high temperatures, corrosive or toxic products etc.

Take note of chapters "*Mounting*" and "*Connecting to power supply*" and carry out the listed steps in reverse order.

With Ex instruments, the housing cover may only be opened if there is no explosive atmosphere present.

8.2 Disposal

The instrument consists of materials which can be recycled by specialised recycling companies. We use recyclable materials and have designed the parts to be easily separable.

WEEE directive 2002/96/EG
This instrument is not subject to the WEEE directive 2002/96/EG and the respective national laws. Pass the instrument directly on to a specialised recycling company and do not use the municipal collecting points. These may be used only for privately used products according to the WEEE directive.

Correct disposal avoids negative effects on humans and the environment and ensures recycling of useful raw materials.

Materials: see chapter "*Technical data*"

If you have no way to dispose of the old instrument properly, please contact us concerning return and disposal.

9 Supplement

9.1 Technical data

General data

Material 316L corresponds to 1.4404 or 1.4435	
Materials, wetted parts	
– Process fitting - thread	316L, Alloy C22 (2.4602)
– Process fitting - flange	316L, 316L with Alloy C22 plated, 316L with ECTFE coated, 316L with PFA coating
– Process seal	Klingersil C-4400
– Tuning fork	316L, Alloy C22 (2.4602)
– Extension tube: ø 21.3 mm (0.839 in)	316L, Alloy C22 (2.4602), 316L with ECTFE coating, 316L with PFA coating
Materials, non-wetted parts	
– Housing	Plastic PBT (polyester), Alu die-casting powder-coated, 316L
– Seal between housing and housing cover	NBR (stainless steel housing), silicone (Alu/plastic housing)
– Optical fibre in housing cover	PMMA (Makrolon)
– Ground terminal	316L
– Temperature adapter (optional)	316L
Gas-tight leadthrough (optional)	
– Supporting material	316L
– Glass potting	Borosilicate glass - Schott no. 8421
– Contacts	1.4101
– Helium leak rate	$< 10^{-6}$ mbar l/s
– Pressure resistance	PN 64
Lengths	
– 316L, Alloy C22 (2.4602)	80 … 6000 mm (3.15 … 236.22 in)
– 316L, ECTFE coated	80 … 3000 mm (3.15 … 118.11 in)
– 316L, PFA coated	80 … 4000 mm (3.15 … 157.48 in)
Tube diameter	ø 21.3 mm (0.839 in)
Weight	
– Plastic housing	760 g (27 oz)
– Aluminium housing	1170 g (41 oz)
– Stainless steel housing	1530 g (54 oz)
– Tube extension	approx. 920 g/m (9.9 oz/ft)
Layer thickness	
– ECTFE	approx. 0.5 mm (0.02 in)
– PFA	approx. 0.5 mm (0.02 in)
Surface quality	
– Standard	R_a approx. 3 µm (1.18^{-4} in)

– Hygienic version 3A (OPTISWITCH 5250 C)	R_a < 0.8 µm (3.15^{-5} in)
– Hygienic version 3A (OPTISWITCH 5250 C)	R_a < 0.3 µm (1.18^{-5} in)
Process fittings	
– Pipe thread, cylindrical (DIN 3852-A)	G¾ A, G1 A
– American pipe thread, conical (ASME B1.20.1)	¾ NPT or 1 NPT
– Flanges	DIN from DN 25, ANSI from 1"
– hygienic fittings	Slotted nut DN 40 PN 40, Clamp 1" DIN 32676 ISO 2852/316L, Clamp 2" DIN 32676 ISO 2852/316L, conus DN 25 PN 40, Tuchenhagen Varivent DN 50 PN 10
Max. torque - process fitting	
– Thread G¾ A, ¾ NPT	75 Nm (55 lbf ft)
– Thread G1 A, 1 NPT	100 Nm (73 lbf ft)
Gas-tight leadthrough (optional)	
– Leakage rate	< 10^{-6} mbar l/s
– Pressure resistance	PN 64

Output variable

Output	Floating transistor output, permanently shortcircuit-proof
Load current	< 400 mA
Voltage loss	< 1 V
Switching voltage	< 55 V DC
Blocking current	< 10 µA
Modes (switchable)	
– A	Max. detection or overflow/overfill protection
– B	Min. detection or dry run protection

Accuracy (according to DIN EN 60770-1)

Reference conditions and actuating variables according to DIN EN 61298-1	
– Ambient temperature	+18 … +30 °C (+64 … +86 °F)
– Relative humidity	45 … 75 %
– Air pressure	860 … 1060 mbar/86 … 106 kPa (12.5 … 15.4 psig)
– Product temperature	+18 … +30 °C (+64 … +86 °F)
– Product density	1 g/cm^3 (0.036 lbs/in^3) (water)
– Product viscosity	1 mPa s
– Superimposed pressure	0 kPa
– Sensor installation	Vertically from top
– Density selection switch	≥ 0.7 g/cm^3

Measuring accuracy

Deviation	± 1 mm (0.04 in)

Influence of the process temperature on the switching point

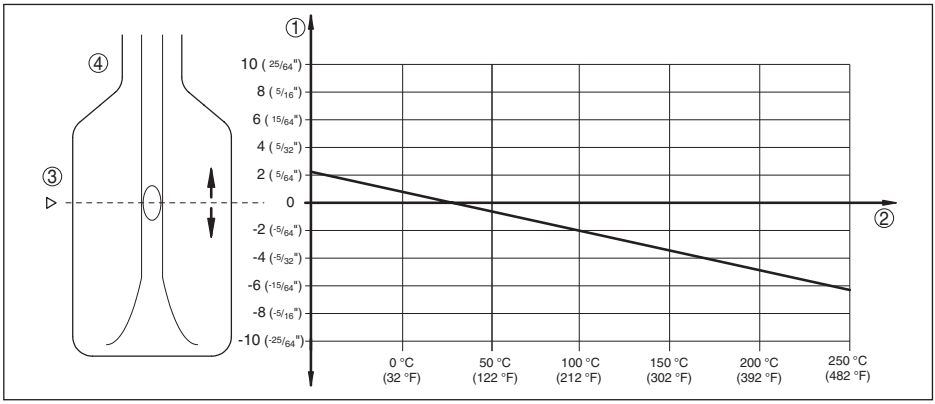

Fig. 25: Influence of the process temperature on the switching point

1 *Shifting of the switching point in mm (in)*
2 *Process temperature in °C (°F)*
3 *Switching point at reference conditions (notch)*
4 *Tuning fork*

Influence of the product density on the switching point

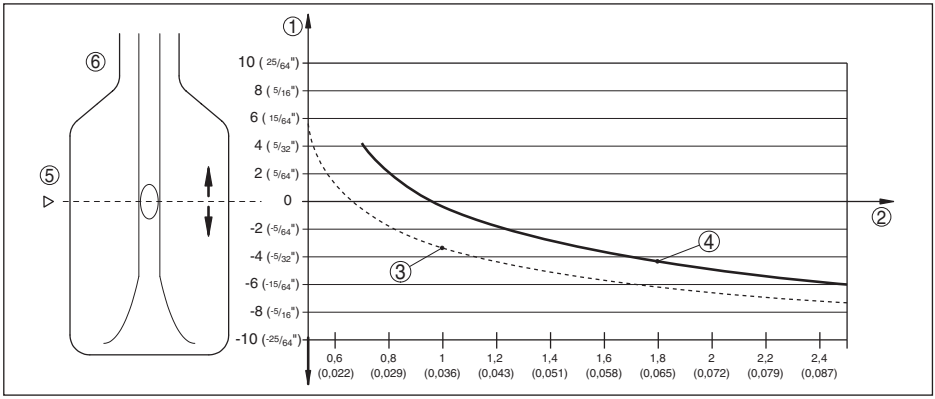

Fig. 26: Influence of the product density on the switching point

1 *Shifting of the switching point in mm (in)*
2 *Product density in g/cm³ (lb/in³)*
3 *Switch position ≥ 0.5 g/cm³ (0.018 lb/in³)*
4 *Switch position ≥ 0.7 g/cm³ (0.025 lb/in³)*
5 *Switching point at reference conditions (notch)*
6 *Tuning fork*

Influence of the process pressure to the switching point

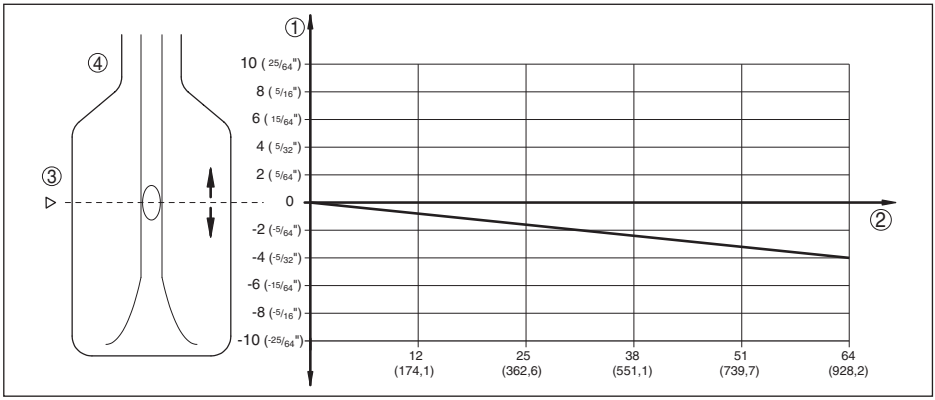

Fig. 27: Influence of the process pressure to the switching point

1 Shifting of the switching point in mm (in)
2 Process pressure in bar (psig)
3 Switching point at reference conditions (notch)
4 Tuning fork

Repeatability	0.1 mm (0.004 in)
Hysteresis	approx. 2 mm (0.08 in) with vertical installation
Switching delay	approx. 500 ms (on/off)
Measuring frequency	approx. 1200 Hz

Ambient conditions	
Ambient temperature on the housing	-40 … +70 °C (-40 … +158 °F)
Storage and transport temperature	-40 … +80 °C (-40 … +176 °F)

Process conditions	
Measured variable	Limit level of liquids
Process pressure	-1 … 64 bar/-100 … 6400 kPa (-14.5 … 928 psig) The process pressure is dependent on the process fitting, for example Clam p or flange (see the following diagrams)
Maximum allowable operating pressure	100 bar/10000 kPa (1450 psig) or 1.5 times process pressure The function of the instrument is ensured up to an operating pressure of 100 bar/10000 kPa (1450 psig) at a maximum process temperature of +50 °C (+122 °F) (only with threaded versions).
Process temperature (thread or flange temperature)	
– OPTISWITCH 5200 C, 5250 C of 316L/Alloy C22 (2.4602)	-50 … +150 °C (-58 … +302 °F)

Process temperature (thread or flange temperature) with temperature adapter (option)

- OPTISWITCH 5200 C, 5250 C of 316L/Alloy C22 (2.4602) -50 … +250 °C (-58 … +482 °F)
- OPTISWITCH 5200 C, 5250 C with ECTFE coating -50 … +150 °C (-58 … +302 °F)
- OPTISWITCH 5200 C, 5250 C with PFA coating -50 … +250 °C (-58 … +482 °F)

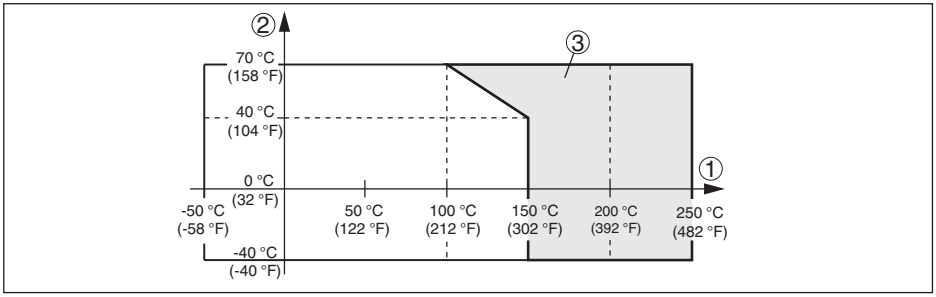

Fig. 28: Ambient temperature - Process temperature

1 Process temperature in °C (°F)
2 Ambient temperature in °C (°F)
3 Temperature range with temperature adapter

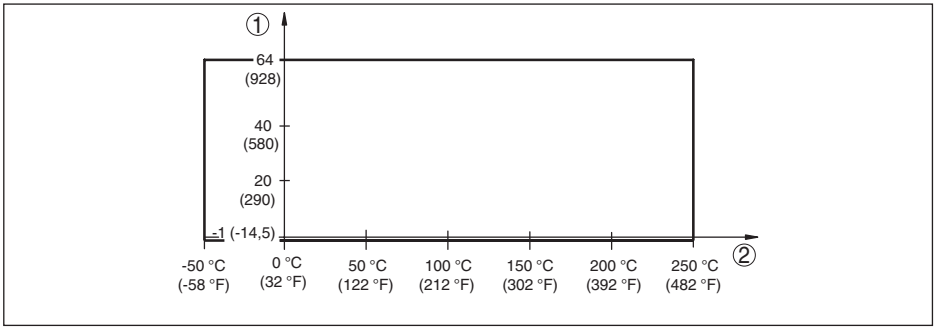

Fig. 29: Process temperature - Process pressure with switch position ≥ 0.7 g/cm³ (sensitivity switch)

1 Process pressure in bar (psig)
2 Process temperature in °C (°F)

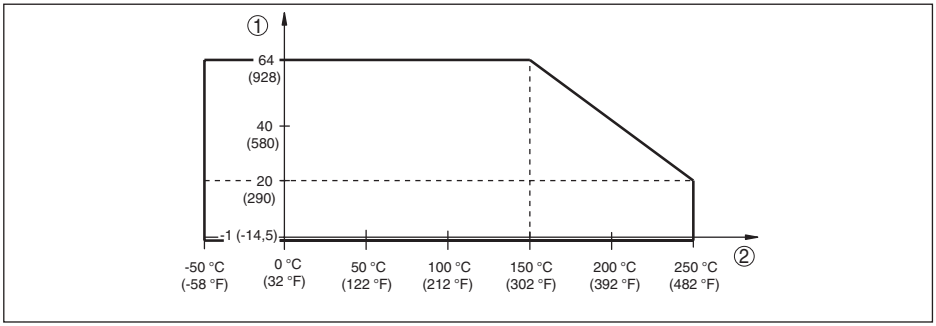

Fig. 30: Process temperature - Process pressure with switch position ≥ 0.5 g/cm³ (sensitivity switch)

1 Process pressure in bar (psig)
2 Process temperature in °C (°F)

Viscosity - dynamic	0.1 … 10000 mPa s (requirement: with density 1)
Flow velocity	max. 6 m/s (with a viscosity of 10000 mPa s)
Density	0.7 … 2.5 g/cm³ (0.025 … 0.09 lbs/in³); 0.5 … 2.5 g/cm³ (0.018 … 0.09 lbs/in³) by switching over
Vibration resistance	
– Instrument housing	1 g at 5 … 200 Hz according to EN 60068-2-6 (vibration with resonance)
– Sensor	1 g with 5 … 200 Hz according EN 60068-2-6 (vibration at resonance) with sensor length up to 50 cm (19.69 in) With a sensor length > 50 cm (19.69 in) you have to fix the extension tube with a suitable support. See mounting instructions.

Electromechanical data

Cable entry/plug[1)]	
– Single chamber housing	– 1 x cable gland M20 x 1.5 (cable: ø 5 … 9 mm), 1 x blind plug M20 x 1.5 or: – 1 x closing cap ½ NPT, 1 x blind plug ½ NPT or: – 1 x plug (depending on the version), 1 x blind stopper M20 x 1.5
Screw terminals	for wire cross-section up to 1.5 mm² (AWG 16)

Adjustment elements

Mode switch	
– A	Max. detection or overflow/overfill protection
– B	Min. detection or dry run protection
Density changeover switch	
– ≥ 0.5 g/cm³	0.5 … 2.5 g/cm³ (0.018 … 0.9 oz/in³)

[1)] Depending on the version M12 x 1, according to ISO 4400, Harting, 7/8" FF.

– ≥ 0.7 g/cm³	0.7 … 2.5 g/cm³ (0.025 … 0.9 oz/in³)

Voltage supply	
Operating voltage	10 … 55 V DC
Power consumption	max. 0.5 W

Electrical protective measures	
Protection rating	IP 66/IP 67 (NEMA 4X)
Overvoltage category	III
Protection class	II

Approvals

Depending on the version, instruments with approvals can have different technical data. For these instruments, please note the corresponding approval documents. They are included in the scope of delivery.

9.2 Dimensions

Housing

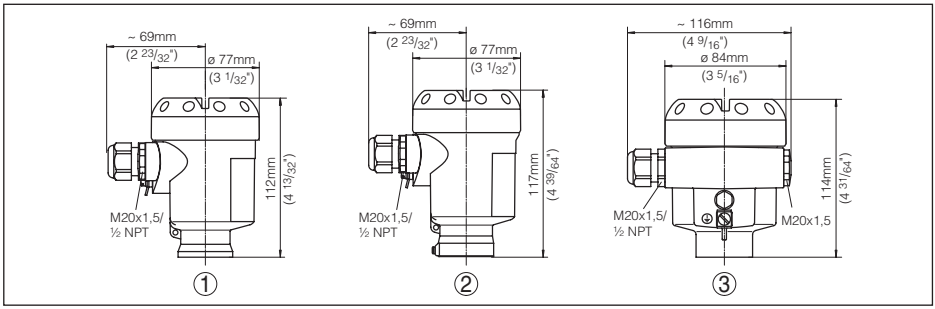

Fig. 31: Housing versions

1 Plastic housing
2 Stainless steel housing
3 Aluminium housing

OPTISWITCH 5200 C, 5250 C

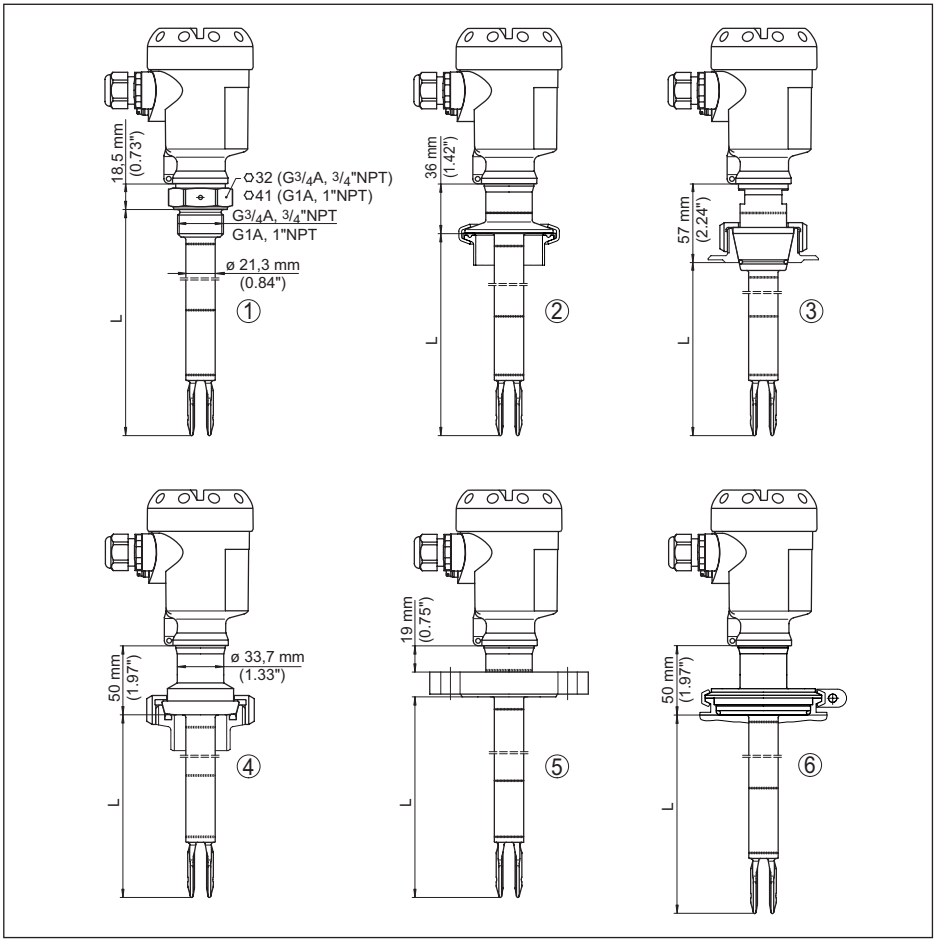

Fig. 32: OPTISWITCH 5200 C, 5250 C, threaded version

1 *Thread*
2 *Clamp*
3 *Cone DN 25*
4 *Slotted nut DN 40*
5 *Flange*
6 *Tuchenhagen Varivent*
L = *Sensor length, see chapter "Technical data"*

OPTISWITCH 5200 C, 5250 C, options

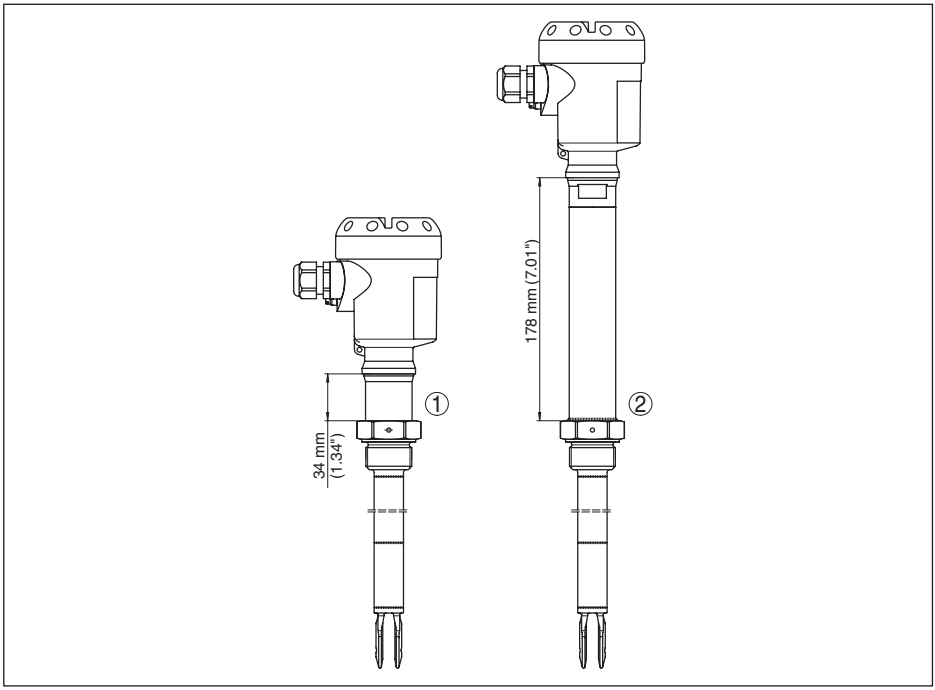

Fig. 33: Options

1 Gas-tight leadthrough
2 Temperature adapter

Subject to change without notice