KROHNE

Operating Instructions

OPTISWITCH 3200 C

Cable shortening set

- Variable area flowmeters
- Vortex flowmeters
- Flow controllers
- Electromagnetic flowmeters
- Ultrasonic flowmeters
- Mass flowmeters
- **Level measuring instruments**
- Communications engineering
- Engineering systems & solutions
- Switches, counters, displays and recorders
- Heat metering
- Pressure and temperature

Contents

1 About this document

1.1 Function 4
1.2 Target group 4
1.3 Symbolism used. 4

2 For your safety

2.1 Authorised personnel 6
2.2 Appropriate use 6
2.3 Warning about misuse 6

3 Product description

3.1 Configuration 7
3.2 Principle of operation 7
3.3 Storage and transport. 7

4 Mounting

4.1 General instructions 8
4.2 Mounting procedure 9

5 Maintenance and fault rectification

5.1 Maintenance 19
5.2 Instrument repair 19

6 Dismounting

6.1 Dismounting procedure. 20
6.2 Disposal 20

7 Supplement

7.1 Technical data 21

30100-EN-041202

1 About this document

1.1 Function

This operating instructions manual has all the information you need for quick mounting and set-up of a replacement component (cable shortening set). Please read this manual before you start setup.

1.2 Target group

This operating instructions manual is directed to trained personnel. The contents of this manual should be made available to these personnel and put into practice by them.

1.3 Symbolism used

Information, tip, note
This symbol indicates helpful additional information.

Caution, warning, danger
This symbol informs you of a dangerous situation that could occur. Ignoring this cautionary note can impair the person and/or the instrument.

Ex applications
This symbol indicates special instructions for Ex applications.

- **List**
  The dot set in front indicates a list with no implied sequence.

→ **Action**
This arrow indicates a single action.

1 **Sequence**
Numbers set in front indicate successive steps in a procedure.

2 For your safety

2.1 Authorised personnel

All operations described in this operating instructions manual must be carried out only by trained specialist personnel authorised by the operator. For safety and warranty reasons, any internal work on the instruments must be carried out only by personnel authorised by the manufacturer.

2.2 Appropriate use

The cable shortening set is used to shorten OPTISWITCH sensors in cable version (OPTISWITCH 3200 C).

2.3 Warning about misuse

Inappropriate or incorrect use of the instrument can give rise to application-specific hazards, e.g. vessel overfill or damage to system components through incorrect mounting or adjustment.

3 Product description

3.1 Configuration

Scope of delivery

The scope of delivery encompasses:

- cable shortening set
- documentation
  - this operating instructions manual

3.2 Principle of operation

Area of application

The cable shortening set is a set of parts required to shorten an OPTISWITCH 3200 C.

The cable shortening set can be used e.g. if the sensor should be looped through a narrow tube.

The cable shortening set must not be used if the concerned sensor is used for solid detection in water.

Physical principle

The cable of the sensor consists of a suspension cable, the electrical lines and an outer insulation.

3.3 Storage and transport

Packaging

Your instrument was protected by packaging during transport. Its capacity to handle normal loads during transport is assured by a test acc. to EN 24180.

The packaging of standard instruments consists of environment-friendly, recyclable cardboard. For special versions PE foam or PE foil is also used. Dispose of the packaging material via specialised recycling companies.

Storage and transport temperature

- Storage and transport temperature see Supplement, Technical data, Ambient conditions
- Relative humidity 20 ... 85 %

4 Mounting

4.1 General instructions

Necessary tools:

- Tape measure/yard stick
- Cleaning rag
- Marker (permanent)
- Bolt cutter
- Flat spanner SW 24
- Gaspipe pliers
- Stripping tools
- Cable stripping knife
- Edge cutter
- Crimping tool
- Allen wrench 2 mm
- Hot air dryer
- Talcum/mounting grease

In addition:

- Bench vice with Aluminium or plastic braces

4.2 Mounting procedure

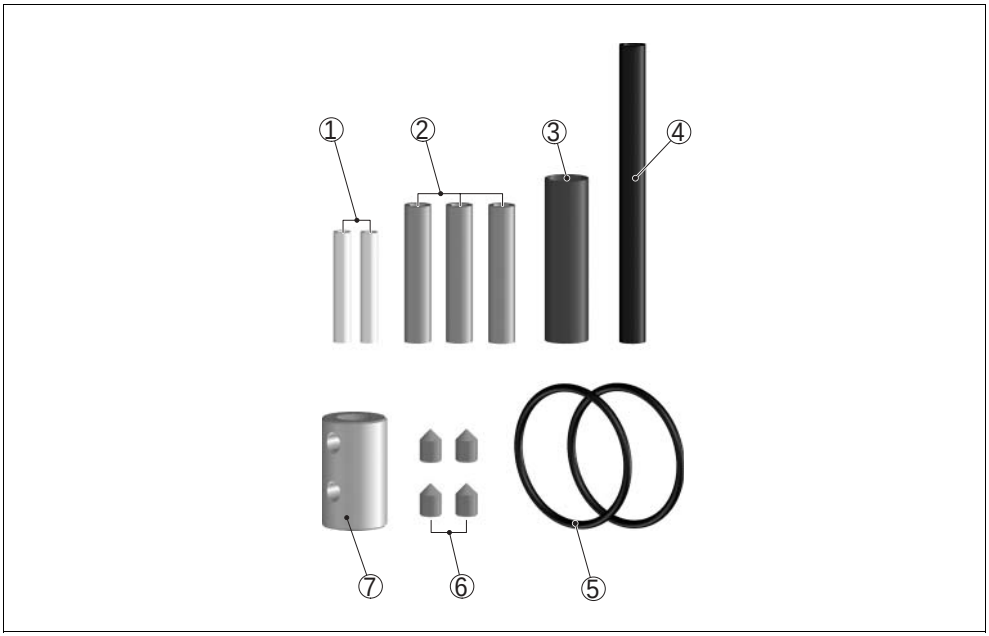

Fig. 1: Cable shortening set for OPTISWITCH 3200 C
1 Crimping connector yellow, 2 pcs., article no. 2.11444
2 Crimping connector red, 3 pcs., article no. 2.18710
3 Shrinking hose blue ø 8 x 30 mm, 1 pce., article no. 1.243
4 Shrinking hose black ø 3 x 55 mm, 1 pce., acticle no. 1.1207
5 O-rings ø 37 x 2 mm, 2 pcs., article no. 2.28878
6 Pins M4 x 6, 4 pcs., article no. 2.28894
7 Cable clamp ø 12 x 20 mm, 1 pce., article no. 2.28876

The numbers in brackets relate to the illustrations on the following pages.

Mounting

1 Interrupt the power supply of the sensor and remove the connection cable.

2 Dismount the sensor.

3 Clean the cable (9) of the sensor.

4 Determine the new sensor length (L) with a measuring tape and mark with a marker.

Information on the sensor length (L) is stated in the operating instructions manual of the sensor.

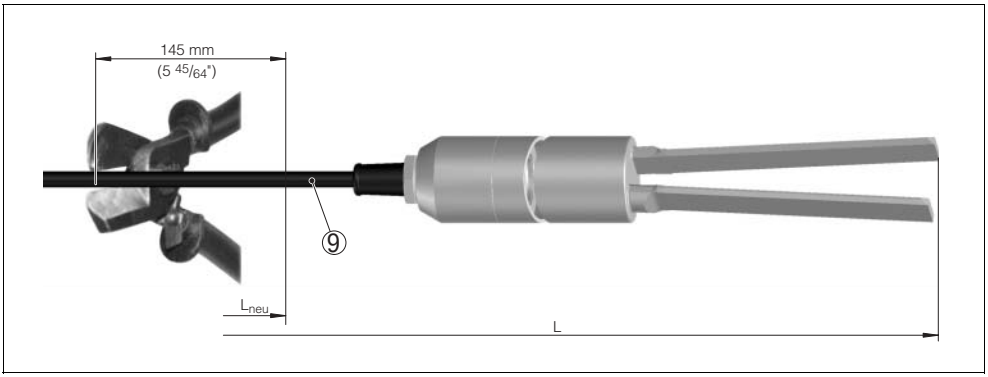

Fig. 2: Cut the cable with a bolt cutter.
9 Cable

5 Cut the cable (9) with a bolt cutter approx. 145 mm (ca. 5.7 in) above the new sensor length (L).

6 Clamp the upper part of the vibrating element (19) in a bench vice.

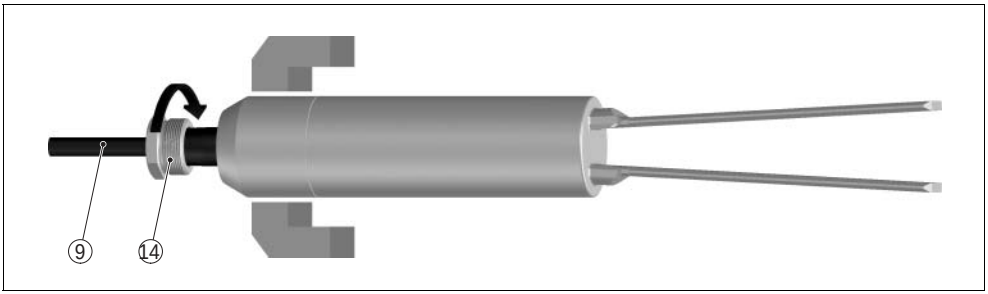

Fig. 3: Open the pressure screw
9 Cable
14 Pressure screw

7 Unscrew the pressure screw (14) with a flat spanner SW 24 so that the cable does not turno during dismounting.

8 Clamp the lower part of the vibrating element (below the screwed section point) in the bench vice.

Do not clamp to the tines.

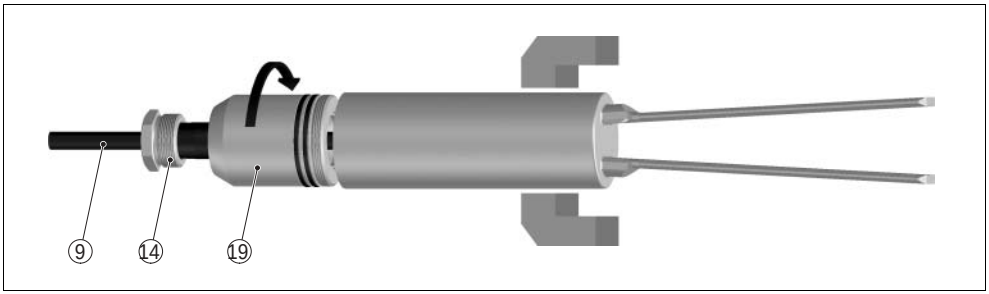

Fig. 4: Turn on the vibrating element
9 Cable
14 Pressure screw
19 Upper part of the vibrating element

9 Loosen the upper part of the vibrating element (19) with gaspipe pliers and unscrew it. Both screwings are secured with soluble locking paint.

Make sure that the cable (9) does not turn.

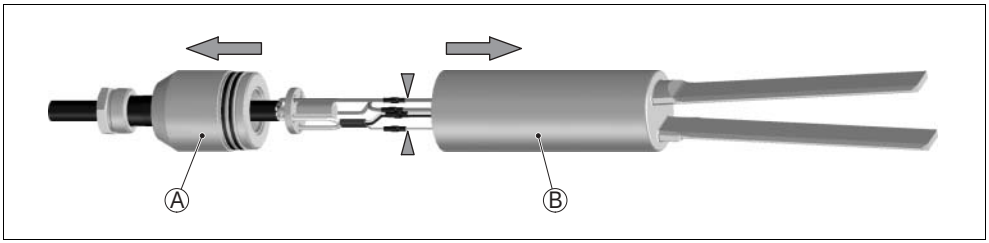

Fig. 5: Uncompress the vibrating element carefully - cut the wires
A Upper part of the vibrating element
B Lower part of the vibrating element

10 Uncompress the two parts (A and B) carefully.

Cut the wires with an edge cutter directly on the wire crimping (see arrows).

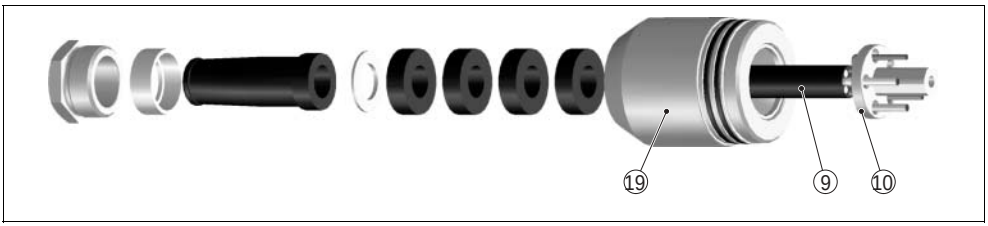

Fig. 6: Pull the cable out of the upper part of the vibrating element
9 Cable
10 Breaker plate
19 Upper part of the vibrating element

11 Pull the cut cable (9) out of the upper part of the vibrating element (19).

Keep all parts for mounting.

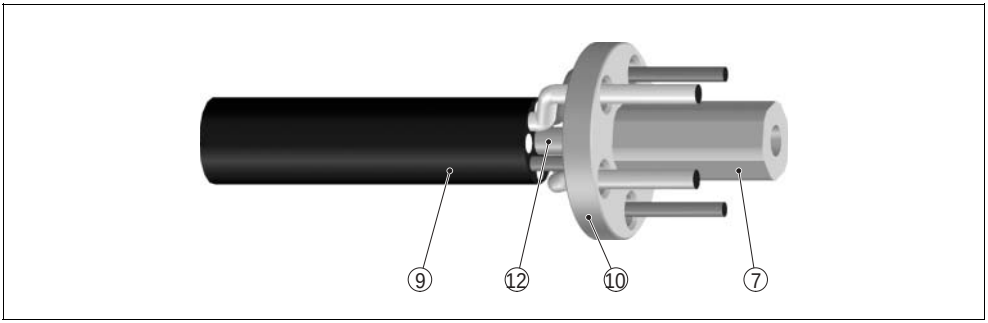

Fig. 7: Cut the suspension cable (12) with a bolt cutter
7 Cable clamp
9 Cable
10 Breaker plate
12 Suspension cable

12 Cut the suspension cable (12) with a bolt cutter and keep the breaker plate (10) for mounting.

13 Clean the remaining cable of the sensor (9) from oil and grease and towel it with talcum.

The old cable crimping cannot be used and must be disposed respectively.

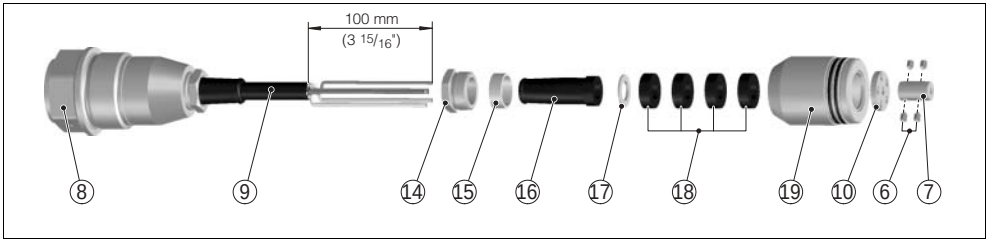

Fig. 8: Slide the parts on the cable
6 Pins (4 pcs.)
7 Cable clamp
8 Mounting boss
9 Cable
10 Breaker plate
14 Pressure screw
15 Pressure ring
16 Rubber wrapping
17 Washer
18 Rubber rings (4 pcs.)
19 Upper part of the vibrating element

14 Shift single parts (14, 15, 16, 17, 18, 19) on the cable acc. to the drawing.

Make sure that the crank of the washer (17) points to the pressure ring (15).

15 Strip off the outer insulation of the cable on a length of 100 mm (4 in).

16 Cut the suspension cable (12) with a bolt cutter by 70 mm (2.8 in) (remaining length: 30 mm/1.2 in).

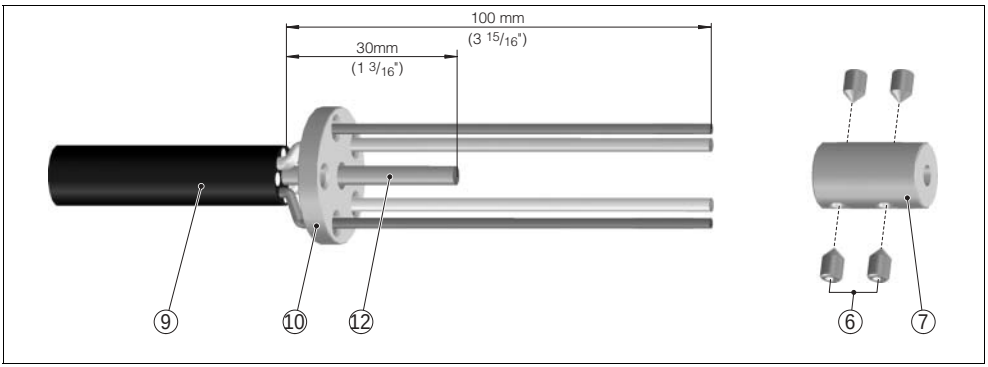

Fig. 9: Shorten suspension cable - attach cable clamp
6 Pins
7 Cable clamp
10 Breaker plate
12 Suspension cable

17 Attach the breaker plate (10) to the bare suspension cable (12) and lead each of the 4 cores (red, blue, grey, green-yellow) through the outer holes of the breaker plate (10).

Do not lead the beige plastic cords (11) through the breaker plate.

18 Attach the cable clamp (7) flush to the suspension cabe (12). When attaching the cable clamp, turn it against the cable drilling to avoid splicing of the wire rope. The chamfered side facilitates the insertion of the cable.

19 Tighten the pins (6) on all sides moderately with an Allen wrench 2 mm. Screw the pins into the cable clamp (approx. 3 Nm/2.2 lbf ft).

20 Cut the beige plastic cords (11) as short as possible with the edge cutter.

21 Remove the insulation of the screened blue (BU) and grey (GY) cores on a length of 60 mm (2.4 in). Push the screen braiding back und slightly open it in the rear section with a sharp object.

Be careful to not damage the cores.

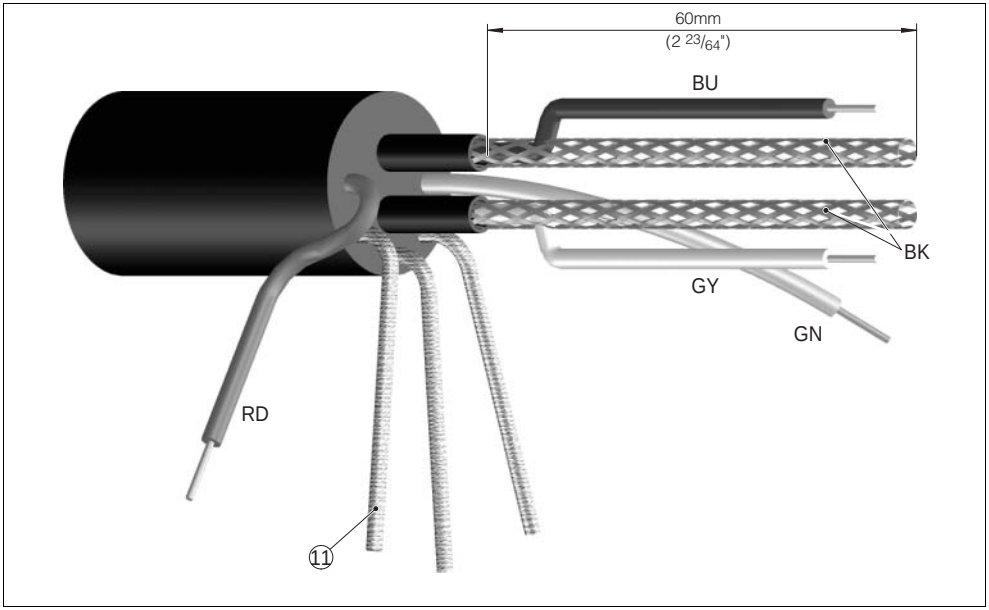

Fig. 10: Pull the cores out of the screen braiding
11 Plastic cords
BU blue
GY grey

22 Pull the grey and blue cores backwards out of the screen braiding.

23 Exchange O-rings (5), slightly grease thread and O-rings.

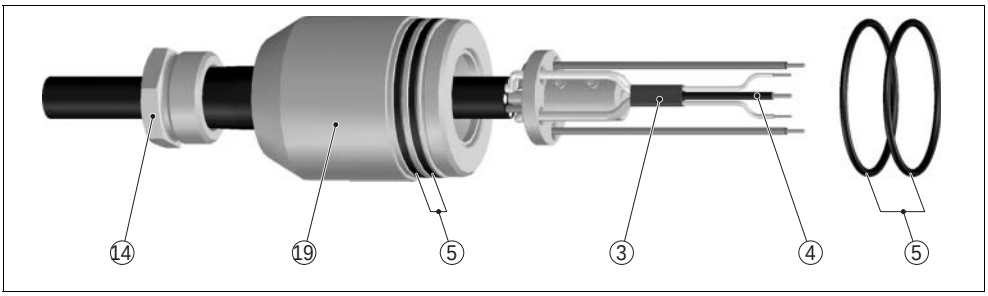

Fig. 11: Exchange the O-rings - prepare the cores
3 Shrink hose - blue
4 Shrink hose - black
5 O-rings
14 Pressure screw
19 Upper part of the vibrating element

24 Bring the screening of the cores (grey) and (blue) together and twist them. Insulate the twisted screening with the black shrink hose (4) acc. to drawing. Shrink the junction blue-black-grey to the insulated core with the blue shrink hose (3).

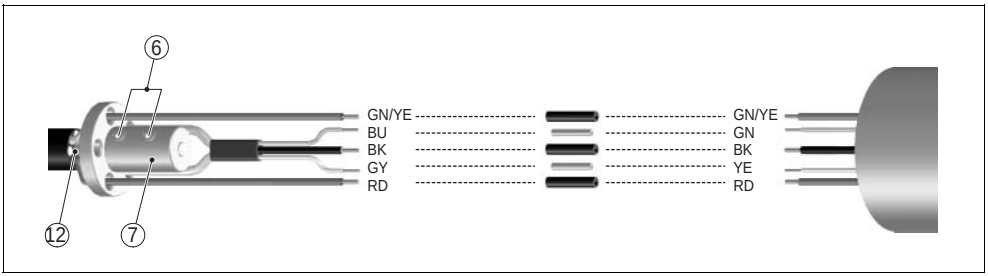

Fig. 12: Connect the cores
7 Cable clamp
12 Suspension cable
BU blue
BK black
GY grey
GN green
RD red
YE yellow

25 Strip off the insulation of the cores on 5 mm (0.2 in) and connect acc. to drawing with the crimping connectors and crimping tools.

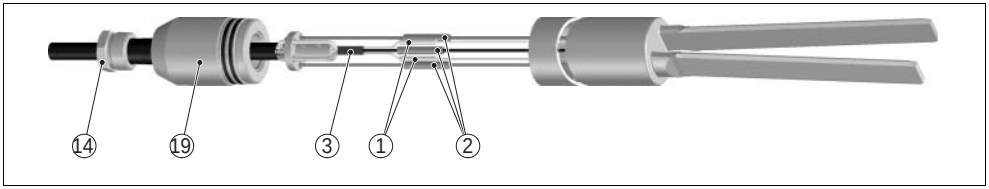

Fig. 13: Connect the cores with the crimping tool
1 Crimping connector - yellow (2 pcs.)
2 Crimping connector - red (3 pcs.)
3 Shrink hose - blue
14 Pressure screw
19 Upper part of the vibrating element

26 Assemble the parts of the vibrating element (A + B). Use locking paint on the thread. Make sure that the cores are not squeezed.

The cable must not turn.

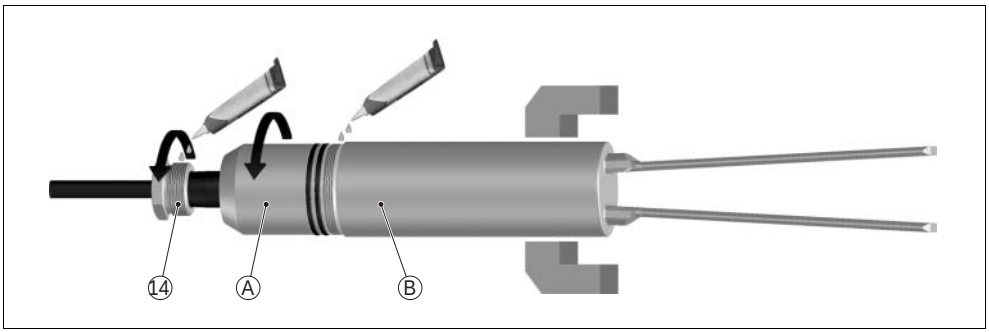

Fig. 14: Assemble the vibrating element
14 Pressure screw
A Upper part of the vibrating element
B Lower part of the vibrating element

27 Fasten the parts of the vibrating element tightly. Clamp the lower part of the vibrating element (B) in the bench vice and turn only the upper part of the vibrating element (A). The cable must not turn.

28 Pull the cable (9) upward and push the seal rings (18) and the washer (17) in the upper part of the vibrating element (19).

29 Shift the pressure screw (14) and the pessure ring (15) to the rubber wrapping (16).

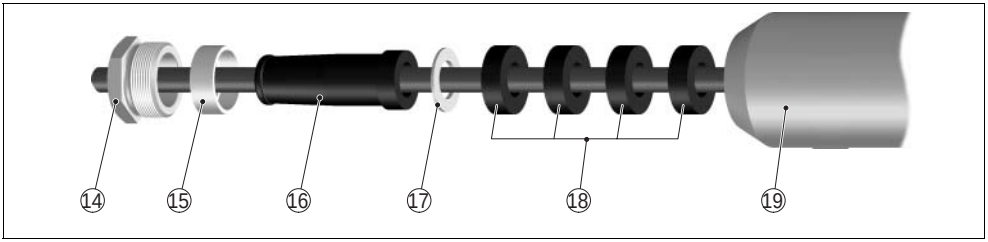

Fig. 15: Cable seal
14 Pressure screw
15 Pressure ring
16 Rubber wrapping
17 Washer
18 Rubber rings
19 Upper part of the vibrating element

30 Put some locking paint on the pressure screw (14) and screw it into the upper part of the vibrating element (19).

31 Tighten the pressure screw (14) with the flat spanner SW 24 (approx. 6 Nm/4.4 lbf ft).

32 Check the sensor length.

33 Install the sensor.

34 Connect the sensor acc. to the operating instructions manual.

35 Check the correct switching function of the sensor.

5 Maintenance and fault rectification

5.1 Maintenance

When mounted as directed to the sensor, the cable shortening set is maintenancefree. There are no restrictions to the information of the sensor documentation.

5.2 Instrument repair

Take note of the information in the sensor documentation.

30100-EN-041202

6 Dismounting

6.1 Dismounting procedure

Take note of the chapter "Mounting" and carry out the described steps in reverse order.

6.2 Disposal

The cable shortening set consists of materials which can be recycled by specialised recycling companies.

Materials: see Technical data

Take note of the information in the sensor documentation.

7 Supplement

7.1 Technical data

General data

Materials, wetted parts	The resistance of the sensor does not change by using the cable shortening set. The applied materials are stated in the operating instructions manual of the sensor.
Sensor length	0.3 ... 80 m (1 ... 262 ft)

Approvals

The respective approvals of the sensor are not restricted by the correct use of the cable shortening set.

30100-EN-041202

30100-EN-041202

http://www.krohne.com

Production

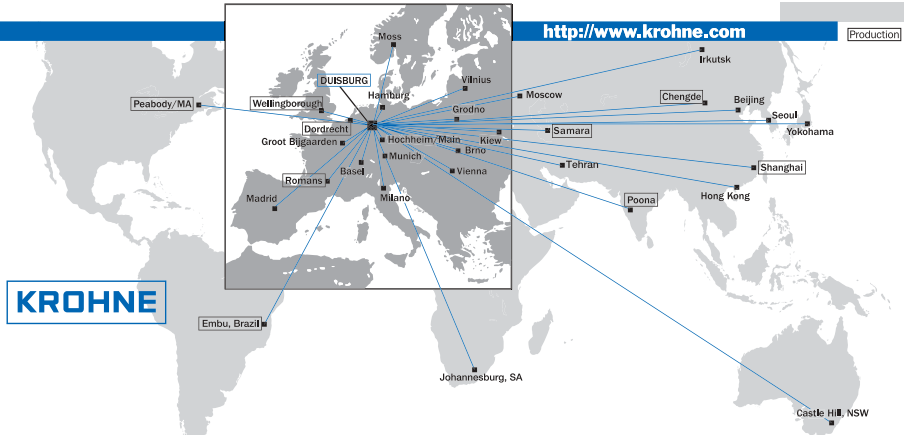

Australia
KROHNE Australia Pty Ltd
Quantum Business Park
10/287 Pulteney Rd
Rydalmere NSW 2116
TEL.: +61 2 8846 1700
FAX: +61 2 8846 1755
e-mail: krohne@krohne.com.au

Austria
KROHNE Austria Ges.m.b.H.
Modecenterstraße 14
A-1030 Wien
TEL.: +43 1 203 45 32
FAX: +43 1 203 47 78
e-mail: info@krohne.at

Belgium
KROHNE Belgium N.V.
Brusselstraat 320
B-1702 Groot Bijgaarden
TEL.: +32(0)2-4 66 00 10
FAX: +32(0)2-4 66 08 00
e-mail: krohne@krohne.be

Brazil
KROHNE Conaut
Controles Automaticos Ltda.
Estrada Das Águas Espraiadas, 230 C.P. 56
06835 - 080 EMBU – SP
TEL.: +55(0)11-4785-2700
FAX: +55(0)11-4785-2768
e-mail: conaut@conaut.com.br

China
KROHNE Measurement Instruments
(Shanghai) Co. Ltd. (KMIC)
Room 1801, Tower A
City Center of Shanghai
100 Zunyi Road
Shanghai 200051
TEL.: +86 21 6237 2770
FAX: +86 21 6237 2771
Cellphone: +86 (0) 139 01954185
e-mail: info@krohne-asia.com

CIS
Kanex KROHNE Engineering AG
Business-Centre Planeta, Office 403
ul. Marxistskaja 3
109147 Moscow/Russia
TEL.: +7 095 727 45 55
FAX: +7 095 727 45 31
e-mail: krohne@kanex.ru

Czech Republic
KROHNE CZ, spol. s r.o.
Sobeènická 156
CZ-63800 Brno
TEL.: +420 545 532 111
FAX: +420 545 220 093
e-mail: brno@krohne.cz

France
KROHNE S.A.S.
Les Ors
BP 98
F-26103 ROMANS Cedex
TEL.: +33(0)4-75 05 44 00
FAX: +33(0)4-75 05 00 48
e-mail: info@krohne.fr

Germany
KROHNE Messtechnik
GmbH & Co. KG
Ludwig Krohne Straße
D-47058 Duisburg
TEL.: +49 (0)203 301-0
FAX: +49 (0)203 301 389
e-mail: krohne@krohne.de

India
KROHNE Marshall Ltd.
A-34/35, M.I.D.C.
Industrial Area, Pirangut
Pimpri Pune 411018
TEL.: +91 (0)20 - 7412020
FAX: +91 (0)20 - 7412020
e-mail: pune@krohn.net

Iran
KROHNE Liaison Office
North Sohrevardi Ave.
26, Sarmad St., Apt. #9
Tehran 15539
TEL.: ++98-21-874-5973
FAX: ++98-21-850-1268
e-mail: krohne@krohneiran.com

Italy
KROHNE Italia Srl.
Via V. Monti 75
I-20145 Milano
TEL.: +39(0)2-4 30 06 61
FAX: +39(0)2-43 00 66 66
e-mail: info@krohne.it

Korea
KROHNE Korea
Room 508 Miwon Bldg
43 Yoido-Dong
Youngdeungpo-Ku
Seoul, Korea
TEL.: 00-82-2-780-1743
FAX: 00-82-2-780-1749
e-mail: krohnekorea@krohnekorea.com

Netherlands
KROHNE Altometer
Kerkeplaat 12
NL-3313 HC Dordrecht
TEL.: +31 (0)78 6306300
FAX: +31 (0)78 6306390
e-mail: postmaster@krohne-altometer.nl

Netherlands
KROHNE Nederland B.V.
Kerkeplaat 12
NL-3313 HC Dordrecht
TEL.: +31 (0)78 6306200
FAX: +31(0)78-6306405
Service Direkt: +31(0)78-6306222
e-mail: info@krohne.nl

Norway
Krohne Instrumentation A.S.
Ekholtveien 114
NO-1526 Moss
P.O. Box 2178, NO-1521 Moss
TEL.: +47(0)69-264860
FAX: +47(0)69-267333
e-mail: postmaster@krohne.no
Internet: www.krohne.no

Singapore
Tokyo Keiso - KROHNE Pte. Ltd.
27 Kian Teck Drive Jurong
Singapore 628844
Singapore
TEL.: ++65-62-64-3378
FAX: ++65-62-65-3382

South Africa
KROHNE Pty. Ltd.
163 New South
Halfway House Ext. 13
Midrand
TEL.: +27 (0)11 313-1685
FAX: +27 (0)11 805-1531
e-mail: midrand@krohne.co.za

Spain
U. KROHNE Iberia, S.r.l.
Polígono Industrial Nilo
Calle Brasil, nº 7a
E-28806 Alcalá de Henares - Madrid
TEL.: +34 (0)91 881 21 52
FAX: +34 (0)91 881 48 54
e-mail: krohne@krohne.es

Switzerland
KROHNE AG
Uferstr. 90
CH-4019 Basel
TEL.: +41(0)61-638 30 30
FAX: +41(0)61-638 30 40
e-mail: info@krohne.ch

United Kingdom
KROHNE Ltd.
Rutherford Way
Park Farm Industrial Estate
Wellingborough,
Northants NN8 6AE, UK
TEL.: +44(0)19 33-408 500
FAX: +44(0)19 33-408 501
e-mail: info@krohne.co.uk

USA
KROHNE Inc.
7 Dearborn Road
Peabody, MA 01960
TEL.: +1 978 535-6060
FAX: +1 978 535 1720
e-mail: info@krohne.com

Other Representatives

Algeria	Japan
Argentina	Jordan
Belarus	Kuwait
Bulgaria	Latvia
Camaroon	Lithuania
Canada	Marocco
Chile	Mauritius
Colombia	Mexico
Croatia	New Zealand
Denmark	Pakistan
Ecuador	Peru
Egypt	Poland
Estonia	Portugal
Finland	Saudi Arabia
French Antilles	Senegal
Greece	Slovakia
Guinea	Slovenia
Hong Kong	Sweden
Hungary	Taiwan
Indonesia	Thailand
Ivory Coast	Turkey
Iran	Tunesia
Ireland	Venezuela
Israel	Yugoslavia

Other Countries
KROHNE Messtechnik
GmbH & Co. KG
Ludwig Krohne Str.
D-47058 Duisburg
TEL.: ++49(0)203 301 309
FAX: ++49(0)203 301 389
e-mail: export@krohne.de

Subject to change without notice