MODEL **EB**

ORBINOX
VALVE SOLUTIONS IN MORE THAN 70 COUNTRIES

Fagerberg

Gustaf Fagerberg AB, Box 12105, 402 41 Göteborg
Besöksadress: Klangfärgsgatan 25-27
Tel. 031-69 37 00, info@fagerberg.se, **fagerberg.se**

INSTALLATION, OPERATION & MAINTENANCE MANUAL

EB Knife Gate Valve

SPAIN, UK, GERMANY, FRANCE, CANADA, USA, BRAZIL, CHILE, PERU, INDIA, CHINA, SOUTH EAST ASIA

www.orbinox.com

ORBINOX
VALVE SOLUTIONS IN MORE THAN 70 COUNTRIES

INSTALLATION, OPERATION & MAINTENANCE MANUAL
EB Knife Gate Valve

0. INTRODUCTION

1. HANDLING

2. INSTALLATION

3. ACTUATORS
   3.1. Handwheel
   3.2. Lever
   3.3. Pneumatic
   3.4. Electric

4. MAINTENANCE
   4.1. Gland packing and seal replacement
   4.2. Lubrication
   4.3. Replacement of the valve
   4.4. Replacement of the actuator

5. STORAGE

6. ENVIRONMENTAL CONSIDERATIONS

7. PARTS LIST & DRAWING

0. INTRODUCTION

The EB model knife gate is a bi-directional valve and consequently it can be installed without considering the flow direction.
This valve is designed for general industrial service applications. The design of the body and seat assures non-clogging shut-off with suspended solids.

The EB valve complies with the following European directives:

- 2006/42/EC: Machinery Directive

When applicable it can also comply with the following additional directives:

- 2014/68/EU: Pressure Equipment Directive
- 2014/34/EU: Potentially Explosive Atmospheres (ATEX)

It is the user's liability to clearly inform the maximum working conditions (PS, TS), medium (gas or liquid) and dangerousness group (1 or 2) and if the fluid is unstable to properly classify the valve according the 2014/68/EU PED directive

ORBINOX offers, supplies and certifies valves according to the information received from the customer. The customer is liable to make sure this information is accurate and according to specific working conditions requirements where the valve will be installed.

Special requirements for ATEX valves:

The EB valve may also comply with the directive regarding equipment and protective systems for their use in explosive atmospheres. In these cases, the logotype (see below) shall appear on the identification label of the valve. This label shows the exact classification of the zone where the valve can be used. The user will be liable for its use in any other zone.

This directive only applies in the following atmospheric conditions:
- 0,8 bar $\leq$ P $\leq$ 1,2 bar
- - 20ºC < T < 60ºC

Any increase in temperature due to frictional warmth is negligible, since the relative speed of the moving parts is extremely low.

The risk analysis associated to this directive does not take into account the fluid that goes through the valve, even when such fluid produces an explosive atmosphere. The user must take into account the risks that the fluid generates, such as:

- Heating of the valve surface.
- Generation of electrostatic charges caused by displacement of the fluid.
- Shock waves caused by the installation (water hammer), internal crashes generated by the pellets or the risks due to foreign bodies susceptible of being present in the installation.

ATEX logotype

1. HANDLING

The valves are packed according to the appropriate transport standards. If you receive the packing damaged, please inform the transport company in writing and contact you ORBINOX representative.

When handling an ORBINOX valve please pay attention to the following points:

- DO NOT ATTACH LIFTING GEAR TO THE VALVE ACTUATORS OR GATE GUARDS. They are not designed to bear the weight, and could easily be damaged.

- DO NOT LIFT THE VALVE BY THE VALVE BORE.
This can cause damage to the seating surfaces and seals.

- Check that selected lifting gear is rated to carry the weight of the valve. The valve can be handled using eyebolts, soft straps or slings.

- EYEBOLTS: make sure the eyebolts have the same thread as the bolt holes and they are all well secured. Ideally when using lifting gear to move an ORBINOX valve, it should be supported by two or more eyebolts screwed into the tapped fixing holes in the valve body.

- SOFT STRAPS: with the valve in the closed position, the straps should be placed between the gland area and the bore such that the valve is balanced.

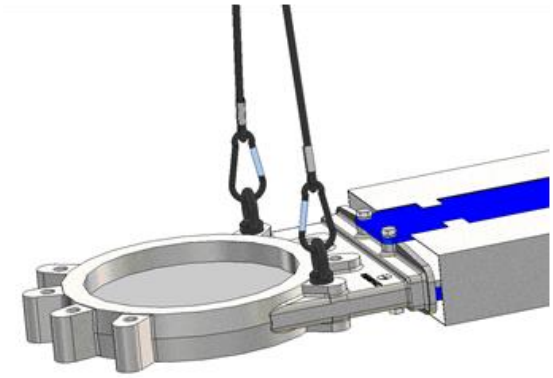

Fig. 1 Handling with eyebolts

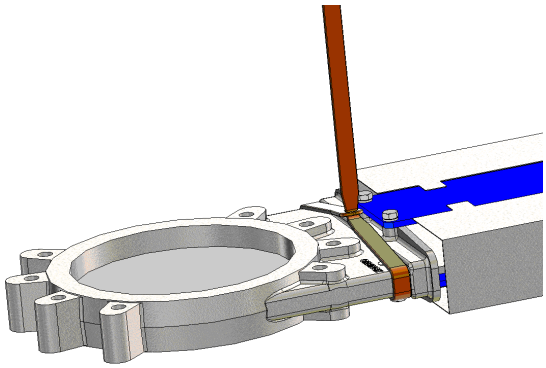

Fig. 2 Handling with soft straps

2. INSTALLATION

In order to avoid personal injury or damage to property when handling and installing the valve, it is important to observe the following warnings:

- It is the User's responsibility to verify compatibility of valve parts materials with the internal fluid
- Qualified and trained personnel must carry out the handling and maintenance of the valve
- Use suitable Individual Protection Equipment (IPE) (gloves, safety footwear...)
- Disconnect all lines affecting the valve and put up a notice notifying that work is being carried out on the valve
- Isolate the valve completely from the process
- Release process pressure
- Drain the fluid from the valve

Special requirements for ATEX valves:

- Make sure the valve is ATEX marked according to the requested zone and it includes all anti-static devices.
- During installation and maintenance operations, use hand tools (non-electric) which do not generate any potential ignition source such as sparks
- Personnel shall have a Working Authorization for explosive classified areas
- Check continuity between the body of the valve and the pipe (test in accordance with EN 12266-2 Standard, annex B, points B.2.2.2. and B.2.3.1).
- This check must be done every time the valve has been removed from the line, serviced, and put back to the line.
- The knife gate valve, included hand operated valves, must be always earthed, i.e., the electrical resistance to earth must be < 10^6 Ω. The integration of the slide knife in the electrically conducting circuit should be checked regularly as required by the operation instructions.

Before installation, inspect the valve body and components for any damage that may have occurred during shipping or storage. Make sure the internal cavities within the valve body are clean. Inspect the pipeline and mating flanges, making sure the pipe is free of foreign material and that the flanges are clean.

The placement of a gasket between the valve and the counter flanges is not required, since the valve is equipped with "O" rings in the flange face.

Special care should be taken to maintain the correct distance between the flanges and to ensure that they are parallel to the valve body. Incorrect alignment of the valve can cause deformations, which can lead to difficulties in operation.

The following table gives the maximum torque values for the valve fixing bolts. Also shown is the maximum depth (T) allowed for the tapped blind bolt holes drilled into the valve body

DN (mm)	T (mm)	Torque (N.m)
50-65	10	60
80-100	12	60
125-200	14	70
250	18	110
300	21	110
350	21	150
400	28	150
450	30	190
500	40	190
600	26	230
700	20	230
800-900	20	280
1000	20	340
1200	35	340

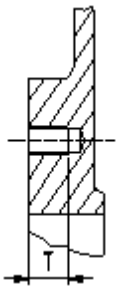

The valve can be mounted in any position with regard to the pipe. However, it is advisable to place it vertically in horizontal pipeline (A) if the installation allows it. (Please consult the technical department at ORBINOX).

With larger diameters (> 300 mm), heavy actuators (pneumatic, electric, etc.), or with the valve installed horizontally (B) or at an angle (C) on a horizontal pipeline, the installation will require the construction of suitable supports. (See the following diagram and consult the technical department at ORBINOX).

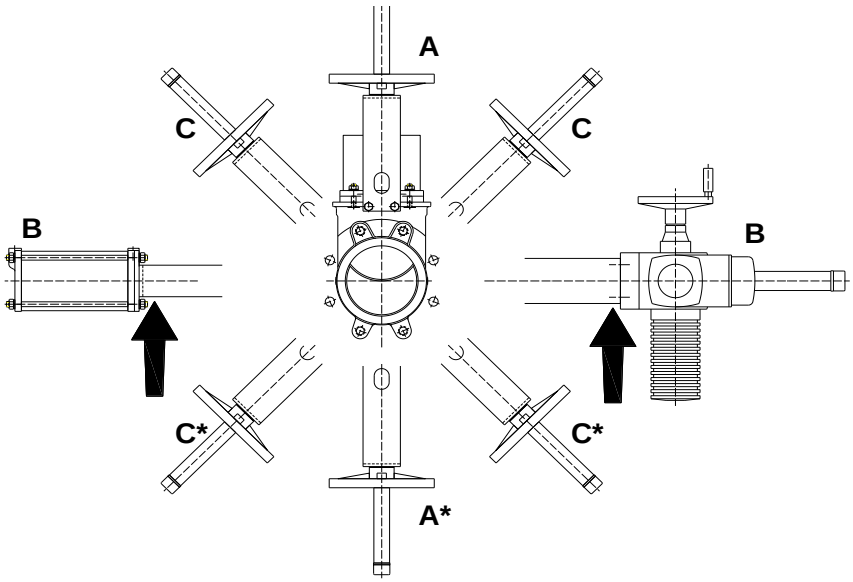

** For these positions please consult ORBINOX.*

Once the valve is installed, test that the flanges have been fastened correctly and that all electrical and/or pneumatic connections have been properly made.

First, operate the valve with no flow in the pipeline. Then test operation and valve seal with flow. It should be noted that the packing material might settle in shipping/storage, which can cause minor leakage. This can be remedied by tightening the gland follower (5) during installation. The nuts shall be tightened gradually and crosswise until the leakage stops (see the next figure). Check that there is no metal contact between the glandfollower (5) and the gate (2).

The operation of automated valves is limited only with fitted gate covers to fulfil 2006/42/EC (machinery Directive).

If the glandfollower nuts are overtorqued, the force needed to operate the valve will increase, the valve function will be affected and the box packing lifetime will be shortened.

The table below shows the absolutely maximum torque value for tightening the glandfollower nuts. Overtorque might result in body and/or packing gland breakage.

DN	Torque (N.m)
50 - 200	15
250 - 300	25
350 - 600	30
700 - 1200	35

Once performance has been tested, the valve can be put into operation.

Approximate weight of the handwheel-operated valve (rising stem):

DN (mm) : kg				
DN 50: 7kg	DN 125: 15 kg	DN 300: 58 kg	DN 500: 192 kg	DN 900: 680 kg
DN 65: 8 kg	DN 150: 18 kg	DN 350: 96 kg	DN 600: 245 kg	DN 1000: 865 kg
DN 80: 9 kg	DN 200: 30 kg	DN 400: 124 kg	DN 700: 405 kg	DN 1200: 1055 kg
DN 100: 11kg	DN 250: 44 kg	DN 450: 168 kg	DN 800: 512 kg	

3. ACTUATORS

The operation of automated valves is limited only with fitted gate covers to fulfil 2006/42/EC (machinery Directive).

Special requirements for ATEX valves:

- Allowed actuator for ATEX zones: pneumatic, hydraulic and electric motor. Hand operated and bare shaft valves are out of the scope of this Directive, but for installation and maintenance, same requirements for explosive areas valves shall apply.
- Make sure these actuators are ATEX marked according to the requested zone.
- Maximum travel speed of the gate must equal or below 1 m/s

3.1. HANDWHEEL

To open the valve turn the handwheel (13) anticlockwise. To close turn the handwheel clockwise

3.2. LEVER

To operate the valve with this device, first loosen the locking clamp located on the top of the yoke (8). Then either open or close the valve by moving the lever in the desired direction. Finally, fix the position of the lever with the locking clamp.

3.3. PNEUMATIC

Valves are usually supplied with a double acting pneumatic actuator although, upon request, we can supply single-acting actuators. In either case the feed pressure can vary between 3,5 and 10 bar. However, the size of the actuator for each valve has been designed for a feed pressure of 6 bar.

It is essential for a good maintenance of the cylinder that air should be well dried, filtered and lubricated. Air quality shall fulfil the following requirements:

- ISO 8573-1 Grade 5:4:3 for regular process (ON / OFF services).
- ISO 8573-1 Grade 5:3:3 for regular process at low temperature (-20 °C).
- ISO 8573-1 Grade 3:4:3 for cylinders with positioners.
- ISO 8573-1 Grade 3:3:3 for cylinders with positioners at low temperature (-20 °C)

It is recommended to actuate the cylinder 3-4 times before the start up, once it is installed in the pipeline.

3.4. ELECTRIC ACTUATOR

Depending on the type or make of the electric actuator, specific instructions (i.e. a manufacturer's manual) will be supplied.

4. MAINTENANCE

The valve must not undergo any modifications without a previous agreement with ORBINOX. ORBINOX shall not be liable for any damages that may arise due to the use of non original parts or components

To avoid personal injury or damage to property from the release of process fluid:

- Those in charge of handling and maintenance of the valve must be qualified and trained in valve operations.
- Use appropriate personal protection equipment (gloves, safety shoes, etc).
- Shut off all operating lines to the valve and place a warning sign.
- Isolate the valve completely from the process.
- Release process pressure.
- Drain the process fluid from the valve.

Special requirements for ATEX valves:

- Make sure the valve is ATEX marked according the requested zone and it includes all anti-static devices.
- Those in charge of handling and maintenance of the valve must be qualified and trained regarding ATEX
- During installation and maintenance operations, use hand tools (non-electric) which do not generate any potential ignition source such as sparks
- Personnel shall have a Working Authorization for explosive classified areas
- Periodicity of check and evaluation of valve electrical conductivity must be determined by end user according to valve working conditions. In any case, once the valve is put into operation, the packing area must be revised after the valve has been stroked 100 times or after 3 months of operation, whatever happens first. After this preliminary check, new checking periods must be determined by end user based on the results of this first check
- Clean the valve periodically to prevent dust accumulation. Do not sweep or dump the dust. Always use a vacuum cleaner system.
- Dead end service is not allowed.
- Do not apply any new coating to the valve. Should it require new coating, please contact our closest representative.
- Allowed seals: EPDM, FKM-FPM and NBR
- Allowed packing: ST, stainless, cupper and graphite
- To keep the ATEX approval, always use original spares from ORBINOX. Original order number is mandatory to receive the correct spares.
- Washer DIN 6798A (This washer guarantees continuity among carbon steel parts, coated in epoxy, yoke and body and stainless-steel guards for coating thicknesses up to 200 microns)
- After any maintenance it is mandatory to check that the valve is correctly earthed, included hand operated valves. Continuity between the valve body, the pipe, the gate, supports and guards must be tested (in accordance with EN 12266-2 Test F21 Annex B, B.2.2.2 and B.2.3.1). Packing shall be checked and pressurized for Zero leakage

MAXIMUM FLUID TEMPERATURES

Atmosphere	
Gas/air, steam/air, and mist/air	Dust/air
80% of minimum fluid ignition temperature in °C	2/3 of minimum dust cloud ignition temperature minus 10ºK, or minimum dust layer ignition temperature minus 85 °K (for layers up 5mm)

Note: these maximum fluid temperatures apply to all categories. The differences between categories are the consideration of foreseeable malfunction cases and rare malfunctions cases

MAXIMUM SEAL AND PACKING TEMPERATURES

Max Temperature (ºC)	SEAL		
	EPDM	FKM-FPM	NBR
	120	200	120

Max Temperature (ºC)	PACKING	
	ST	GRAPHITE
	250	600

Note: Most of the times seals maximum temperature capacity is the key limitation factor when evaluating valve maximum working temperatures. In ATEX zones these temperatures must be compared to those above related to limitation of fluids temperatures.
Always consider the most restrictive as maximum valve working temperature.

The only maintenance required is to change the gland packing (4) or the seal (3).
The life of these elements will depend on the working conditions of the valve such as: pressure, temperature, abrasion, chemical action, number of operations, etc.

4.1. Replacement of the gland packing (4) and the seal (3):

1. Depressurise the circuit and place the valve in close position.
2. Remove the gate guards (for automatically actuated valves only).
3. • Non rising stem. Photo 1: Photo1: Release the stem nut (7) from the gate (2).
   • Rising stem valves, Photo 2: Release the spindle or stem (6) from the gate (2).

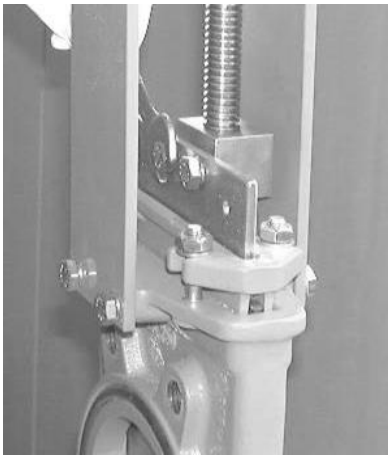

Photo 1

Photo 2

4. Loosen the screws of the yoke (8) and remove it (without loosing the actuator).
5. Loosen the nuts of the gland follower (5) and remove it. (Photo 5)
6. Remove the old packing lines (4)

7.1. Up to DN-500 (monoblock body valves)

- 7.1.1. Remove the gate (2)
- 7.1.2. Remove the old seal (3) and clean the stuffing box.
- 7.1.3. Insert the new seal (3) and the cleaned gate (2)

7.2. Above DN-500 (split body valves)

- 7.2.1. Loosen the screws which hold together body (1) and counter body (1.1).
- 7.2.2. Separate carefully the counter body (1.1) from the body (1)
- 7.2.3. Remove the gate (2) and clean it.
- 7.2.4. Remove the worn seal (3) and clean the seal housing.
- 7.2.5. Remove the worn O-ring (3.1) and clean the O-ring housing.
- 7.2.6. Put the new seal (3) and the new O-ring (3.1) into the housings of the body (1).
- 7.2.7. Assembly body (1) and counter body (1.1) back.
- 7.2.8. Place all the screws between body (1) and counter body (1.1). Leave them loose.
- 7.2.9. Tighten only the screws at the bottom part of the flange (Photo 3)

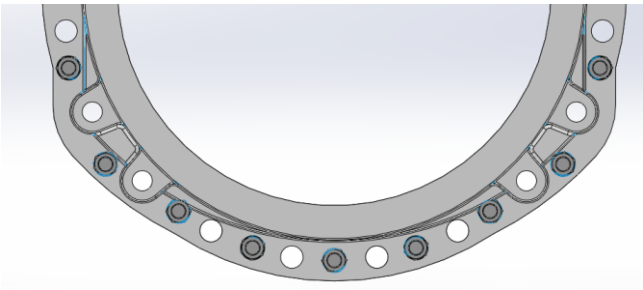

Photo 3

7.2.10. Put the valve in vertical position

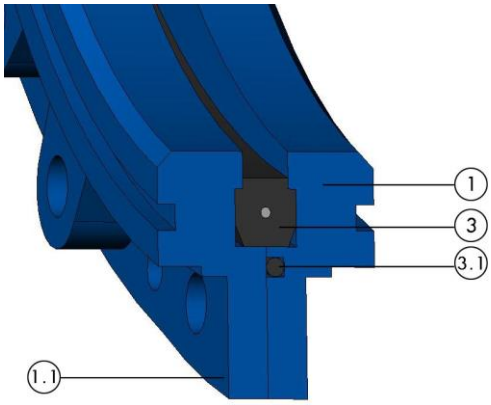

Photo 4

7.2.11. Put grease on the edges of the cleaned gate (2)
7.2.12. Insert the gate (2). If too tight, loosen slightly the screws
7.2.13. Tighten all screws placed on body (1) and counter body (1.1)

8. Once the necessary new packing lines (4) have been inserted, proceed with a steady initial tightening of the gland follower (5).(Photo 5)
9. Place the yoke (8) (with the actuator) and screw it.
10. Fix the stem nut (7) to the gate (2)(Non rising stem valves. Photo 1) or fix the stem (6) to the gate (2)(Rising stem valves.Photo 2).
11. Remount the gate guards (for automatically actuated valves only).
12. Carry out some operations with a loaded circuit and then re-tighten the gland follower (5) to prevent leakage.

Photo 5

4.2. Lubrication:

Lubricate the stem every 30 days with a calcium-based grease with the following characteristics: highly water resistant, low ash content, and excellent adherence.

4.3. Replacement of the valve:

Special requirements for ATEX valves

To replace the whole valve:

1. The same valve with exactly the same certificates must be ordered to ORBINOX. When placing this order, it is customer liability to clearly indicate that the new ordered valve is a replacement of a certified valve.
2. It is user's liability to ensure that all requirements in the "maintenance" chapter are fulfilled
3. Loose the bolts than joint the actuator to the slide
4. Loose the yoke to body bolts
5. Reassemble the valve

4.4. Replacement of the actuator:

Special requirements for ATEX valves

To replace the actuator:

1. The same actuator with exactly the same certificates must be ordered to ORBINOX. When placing this order, it is customer liability to clearly indicate that the new actuator is a replacement of a certified valve
2. It is user's liability to ensure that all requirements in the "maintenance" chapter are fulfilled
3. Loose the bolts than joint the actuator to the yoke
4. Reassemble the valve

5. STORAGE

- For long storage periods keep the valves indoors in a safe and dry place and protect it from any impact and or vibrations
- Storing temperatures: -10ºC to +40ºC
- Valves must be stored in either full open or full closed position
- For any component installed in the valves, electric motors, solenoid valves, etc, please refer to their own instructions manuals

6. ENVIRONMENTAL CONSIDERATIONS

- The packaging is made from environmentally friendly materials. Dispose of the packaging through the available recycling channels
- The valve is designed and manufactured with materials that can be recycled by specialised recycling firms. Once the life of the product is expired, you have to consider a proper disposal of the product in order to prevent any negative impact on the environment and allows for the recycling of valuable commodities
- Please follow the local environmental rules in your country for proper disposal

ORBINOX
VALVE SOLUTIONS IN MORE THAN 70 COUNTRIES

7. PARTS LIST & DRAWINGS

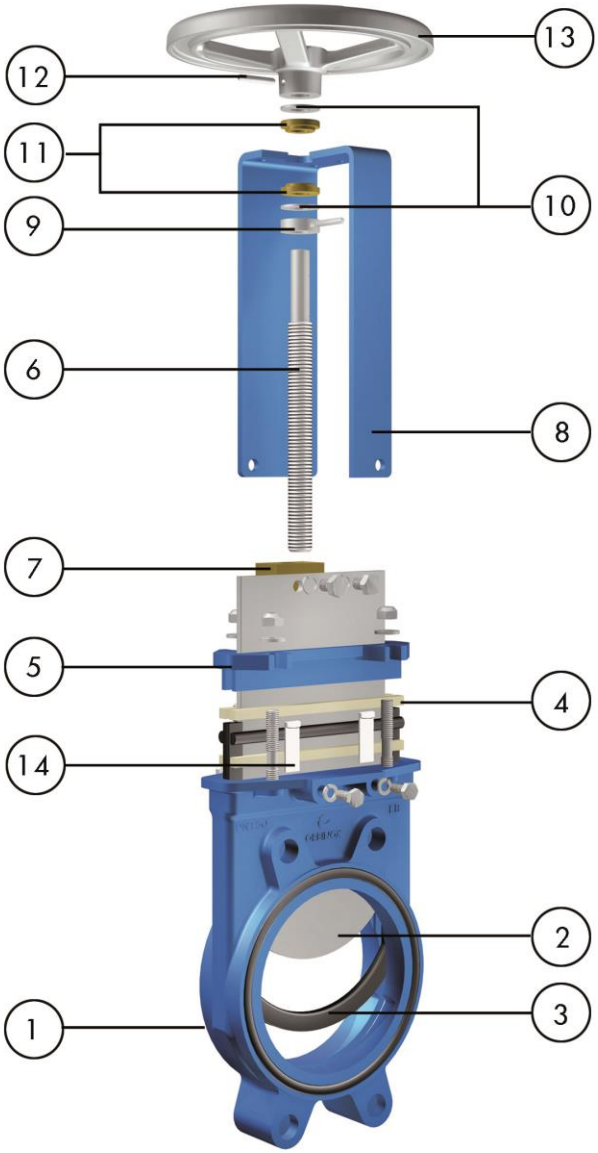

1. BODY	8. YOKE
2. GATE	9. AXIAL FIXING BUSH
3. SEAL	10. FRICTION WASHER
4. PACKING LINE	11. BUSHING
5. GLAND FOLLOWER	12. SPRING PIN
6. STEM	13. HANDWHEEL
7. STEM NUT	14. SLIDER (UP TO DN300)