ALTOSONIC 5 Handbook

Ultrasonic liquid flowmeter for custody transfer

KROHNE

IMPRINT

1.1 Intended use

CAUTION!
Responsibility for the use of the measuring devices with regard to suitability, intended use and corrosion resistance of the used materials against the measured fluid lies solely with the operator.

INFORMATION!
The manufacturer is not liable for any damage resulting from improper use or use for other than the intended purpose.

The ALTOSONIC 5 is a flowmeter for flow measurement of all liquids. It has a custody transfer approval for all liquids other than water.

1.2 Certifications

European Union (EU):

- Pressure Equipment Directive 97/23/EC
- EMC directive 2004/108/EC, according to:
  EN 50081-2
  EN 61000-6 (part 1, 2 and 3)
  EN 61326-1 and A1, A2
- ATEX directive 94/9/EC according to:
  EN 60079-0
  EN 60079-1 (Ex 'd')
  EN 60079-11 (Ex 'ia')
- Custody transfer approvals according to:
  MID directive 2004/22/EC ((MID = Measurement Instrument Directive)
  OIML R117-1 (International Organization for Legal Metrology)

North America:

- Certified for use in potentially explosive atmospheres according to DIV1 and Zone 1 classification.
- Custody transfer in compliance with API

Canada:

- CRN
- Certified for use in potentially explosive atmospheres according to DIV1 and Zone 1 classification.

Other standards:

- IECEx according to:
  IEC 60079-0
  IEC 60079-1
  IEC 60079-11

INFORMATION!
Not all country specific approvals are listed here. Please consult KROHNE in case of a specific approval that is not listed here.

1.3 Safety instructions from the manufacturer

1.3.1 Copyright and data protection

The contents of this document have been created with great care. Nevertheless, we provide no guarantee that the contents are correct, complete or up-to-date.

The contents and works in this document are subject to copyright. Contributions from third parties are identified as such. Reproduction, processing, dissemination and any type of use beyond what is permitted under copyright requires written authorisation from the respective author and/or the manufacturer.

The manufacturer tries always to observe the copyrights of others, and to draw on works created in-house or works in the public domain.

The collection of personal data (such as names, street addresses or e-mail addresses) in the manufacturer's documents is always on a voluntary basis whenever possible. Whenever feasible, it is always possible to make use of the offerings and services without providing any personal data.

We draw your attention to the fact that data transmission over the Internet (e.g. when communicating by e-mail) may involve gaps in security. It is not possible to protect such data completely against access by third parties.

We hereby expressly prohibit the use of the contact data published as part of our duty to publish an imprint for the purpose of sending us any advertising or informational materials that we have not expressly requested.

1.3.2 Disclaimer

The manufacturer will not be liable for any damage of any kind by using its product, including, but not limited to direct, indirect or incidental and consequential damages.

This disclaimer does not apply in case the manufacturer has acted on purpose or with gross negligence. In the event any applicable law does not allow such limitations on implied warranties or the exclusion of limitation of certain damages, you may, if such law applies to you, not be subject to some or all of the above disclaimer, exclusions or limitations.

Any product purchased from the manufacturer is warranted in accordance with the relevant product documentation and our Terms and Conditions of Sale.

The manufacturer reserves the right to alter the content of its documents, including this disclaimer in any way, at any time, for any reason, without prior notification, and will not be liable in any way for possible consequences of such changes.

1.3.3 Product liability and warranty

The operator shall bear responsibility for the suitability of the device for the specific purpose. The manufacturer accepts no liability for the consequences of misuse by the operator. Improper installation or operation of the devices (systems) will cause the warranty to be void. The respective "Standard Terms and Conditions" which form the basis for the sales contract shall also apply.

1.3.4 Information concerning the documentation

To prevent any injury to the user or damage to the device it is essential that you read the information in this document and observe applicable national standards, safety requirements and accident prevention regulations.

If this document is not in your native language and if you have any problems understanding the text, we advise you to contact your local office for assistance. The manufacturer can not accept responsibility for any damage or injury caused by misunderstanding of the information in this document.

This document is provided to help you establish operating conditions, which will permit safe and efficient use of this device. Special considerations and precautions are also described in the document, which appear in the form of icons as shown below.

1.3.5 Warnings and symbols used

Safety warnings are indicated by the following symbols.

DANGER!
This warning refers to the immediate danger when working with electricity.

DANGER!
This warning refers to the immediate danger of burns caused by heat or hot surfaces.

DANGER!
This warning refers to the immediate danger when using this device in a hazardous atmosphere.

DANGER!
These warnings must be observed without fail. Even partial disregard of this warning can lead to serious health problems and even death. There is also the risk of seriously damaging the device or parts of the operator's plant.

WARNING!
Disregarding this safety warning, even if only in part, poses the risk of serious health problems. There is also the risk of damaging the device or parts of the operator's plant.

CAUTION!
Disregarding these instructions can result in damage to the device or to parts of the operator's plant.

INFORMATION!
These instructions contain important information for the handling of the device.

LEGAL NOTICE!
This note contains information on statutory directives and standards.

- HANDLING
  This symbol designates all instructions for actions to be carried out by the operator in the specified sequence.

➲ RESULT
This symbol refers to all important consequences of the previous actions.

1.3.6 Manufacturer

The instrument is developed and manufactured by:
KROHNE Altometer
Kerkeplaat 12
3313 LC Dordrecht
The Netherlands

For information, maintenance or service please contact your nearest local KROHNE representative.

1.4 Safety instructions for the operator

DANGER!

- *Do not change the device. Unauthorized changes may affect the explosion safety of the devices.*
- *The prescriptions and regulations as well as the electrical data described in the EC type examination certificate must be obeyed.*
- *Beside the instructions for electrical installations in non-hazardous locations according to the applicable national standard (equivalent to HD 384 or IEC 364, e.g. VDE 0100), especially the regulations in EN 60079-14 "Electrical installations in hazardous locations" or equivalent national standard (e.g. DIN VDE 0165 Part 1) or dust hazardous areas such as EN 61241-14 must be strictly followed.*
- *Installation, establishment, utilization and maintenance are only allowed to be executed by personnel with an education in explosion safety!*

2.1 Scope of delivery

INFORMATION!
Do a check of the packing list to make sure that you have all the elements given in the order.

INFORMATION!
The instrument is delivered in a seaworthy, reinforced wooden crate. Inspect the packing carefully for damages or signs of improper handling. Report damage to the carrier and to the local office of the manufacturer.

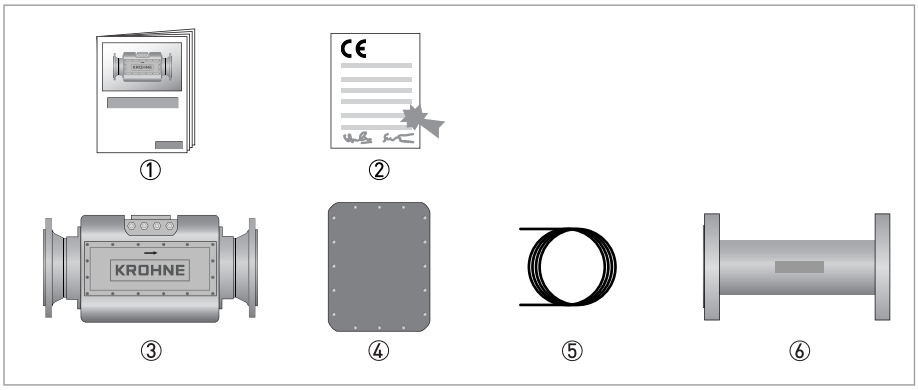

Figure 2-1: Scope of delivery

① Product documentation
② CE declaration of conformity
③ Flow sensor in ordered version
④ Signal converter
⑤ Three signal cables, one PT100 cable
⑥ Optional: flow conditioner, spare parts and / or installed impact indicators

CAUTION!
When multiple meters are delivered, check the serial number on each part so that each flow sensor is accompanied by its own spoolpiece, flow conditioner and signal converter.

INFORMATION!
Calibration reports and project specific documents are in the meter's databook that is sent separately.

2.2 General device description

The ALTOSONIC 5 flowmeter consists of a flow sensor and a signal converter.

2.2.1 Flow sensor

A series of ultrasonic transducers are installed in the measuring tube of the flow sensor. Each pair of intrinsically safe ultrasonic transducers forms an acoustic measurement path. The acoustic measurement path consists of one (direct) chord.
The chords in the horizontal plane are used for flow measurement, the chord in the vertical plane is used for diagnostics only.

The transducers are electrically connected to the connection box on top of the flow sensor by means of coaxial cables.

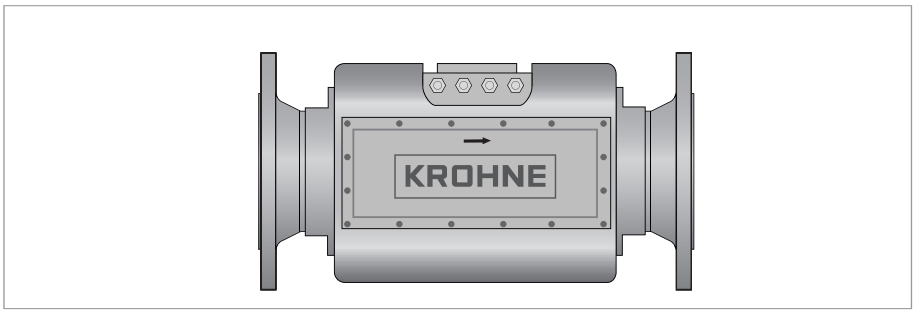

Figure 2-2: Flow sensor

Acoustic signals are transmitted and received by means of ultrasonic transducers. The active part of an ultrasonic transducer is a small disk of piëzo electric ceramic in the front of the transducer. It is packaged (sealed) in a construction of metal parts and installed behind a metal acoustic window. The transducer itself is not exposed to the measured liquid. The window is designed to achieve the best efficiency for transmitting and receiving ultrasound through the liquid.
The transducers can be exchanged under process conditions without the use of special tools such as a retraction tool, if the conditions are not extremely hot or cold. However, special tooling is required to remove the inner part of the transducer and the piezo that can stick to the steel window.

2.2.2 The signal converter

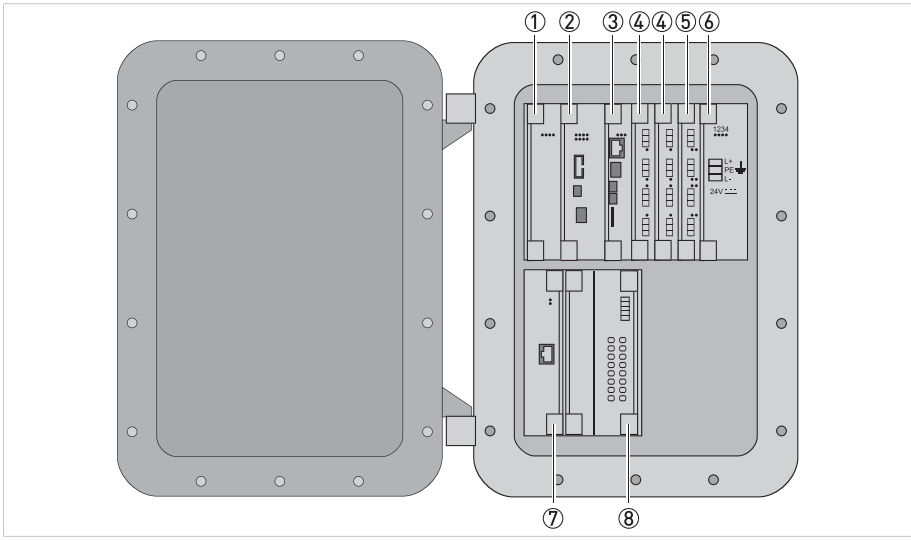

Figure 2-3: Signal converter

Number	Board name	Function	Short name
①	Power Supply Board Intrinsically IS	Intrinsically safe power supply	PSB IS
②	Digital Processor Board	calculation of flow rate	DPB
③	Monitoring Configuration and Diagnostic	Logging and communication	MCD
④	SMART IO	Configurable IO	SMART IO
⑤	RS485 IO Board	4x RS485 Serial communication port	RS485
⑥	Power Supply Board	Power supply for all cards in signal converter	PSB
⑦	Analog Processor Board	Processes the analog signals from the flow sensor	APB
⑧	Multiplex Board	Connection of the analog signals (transducers and body temperature) from the flow sensor to the APB	MUX

INFORMATION!
Detailed descriptions and connections can be found in Chapter 4.

2.2.3 Cable glands and cables

The flow sensor and signal converter are installed mostly in a hazardous area. To achieve compliance with the certifications, it is mandatory that the flow sensor and the signal converter are installed with the supplied cables and cable glands. If other cables and / or cable glands are used, then these certificates are void.

2.2.4 Software description

The ALTOSONIC 5 uses powerful microprocessors which are configured by a specific set of parameters to enable the measurement of various sizes and models of flowmeters.

§

LEGAL NOTICE!
The parameters are stored in a configuration file. Configuration parameters are password protected in order to prevent unauthorized modification. Access in order to read, view and inspect parameter values is restricted by the type of user.

Individual parameters are classified according to “roles” in order to define differentiated access rights. Each “role” is associated with a “typical” user or operator having specific responsibilities and/or duties. Users have to be registered with a user name and a password, when registered the role of the user is also defined, and by consequence also the access rights of that user.

The following roles have been defined, listed in according to the rank in the hierarchy.

Roles and authorisation

Factory	restricted to KROHNE factory employees, to implement factory settings in the meter.
Service	restricted to authorized service personnel, to the discretion of KROHNE.
Calibrator	restricted to personnel acting on behalf of a legal calibration station.
Supervisor	restricted to personnel acting on behalf of the owner/operator of the meter (administrator function), to the discretion of the owner/operator of the meter.
Operator	restricted to personnel acting on behalf of the owner/ operator of the meter (for day to day operation), to the discretion of the owner/operator of the meter.

Only a higher rank user can register a lower rank user. Users can have the same rank.

In addition to restrictions depending of the defined role of a user, a physical “overwrite disable” contact / jumper protects the configuration parameters. This disables any user from making modifications to parameters that would influence the measured flow or volume value. This prevents unintentional or unauthorized changes to the parameters and possibly invalidation of the calibration.

Normally the flowmeter is delivered as a calibrated instrument. Therefore the configuration parameters are meter specific and can not be changed. Other parameters such as IO parameters on frequency outputs and communication are application specific and can be changed if needed. Any change in configuration is logged with time/date/user/previous value. This information can be retrieved afterwards for auditing and verification purposes.

2.3 Ex approval standards and markings

The flowmeter consists of a flow sensor and a signal converter, that are designed to meet explosion safety requirements based on:

- an intrinsic safe flow sensor
- an explosion proof signal converter

2.3.1 Approvals

The device is manufactured according to the European Directive 94/9/EC (ATEX), to IEC standards for hazardous areas, to ISA/ANSI DIV 1 Canadian and US standards for hazardous locations. The flowmeter is approved for installation and use in hazardous locations of Zone 1 and 2 and are in accordance with the European, Canadian and US Standards of the IEC/EN 60079, ANSI/ISA 60079, CSA C22.2 series. The approval numbers are:

Flow sensor

- ATEX: FTZU 14 ATEX 14.0131X
- IECEx: IECEx FTZU 14.0020X
- DIVISION (Ca & USA): LR 1338-1
- ZONE (Ca & USA): LR 1338-1

Signal converter

- ATEX: FTZU 14 ATEX 0042X
- IECEx: IECEx FTZU 14.0029X
- DIVISION (Ca & USA): LR 1338-2
- ZONE (Ca & USA): LR 1338-2

2.3.2 Standards

Flow sensor

The flow sensor is manufactured in accordance with:

- IEC/EN 60079-0 General requirements
- IEC/EN 60079-11 Intrinsic Safety
- CSA C22.2 No. 60079-0
- CSA C22.2 No. 60079-11
- CSA C22.2 No. 94
- CSA C22.2 No. 157
- CSA C22.2 No. 61010-1-12
- ANSI/ISA 600079-0
- ANSI/ISA 60079-11
- NEMA 250
- ANSI/UL913
- ANSI/ISA 61010-1

It is designed to be used for gas group IIC and temperature classes T6...T2 and has an ingress protection rating of IP66 or NEMA Type 4X.

Signal converter

The signal converter is manufactured in accordance with:

- IEC/EN 60079-0 General requirements
- IEC/EN 60079-1 Flameproof enclosure
- IEC/EN 60079-11 Intrinsic Safety
- CSA C22.2 No. 60079-0
- CSA C22.2 No. 60079-11
- CSA C22.2 No. 94
- CSA C22.2 No. 157
- CSA C22.2 No. 30
- CSA C22.2 No. 61010-1-12
- ANSI/ISA 600079-0
- ANSI/ISA 60079-11
- NEMA 250
- ANSI/UL913
- ANSI/UL1203
- ANSI/ISA 61010-1

It is designed to be used for gas group IIB and temperature class T5.

2.3.3 Flow sensor markings

The flow sensor is certified as group II, category 2G equipment for gas hazardous areas zone 1 and 2, group IIC, temperature class T6...T2 and has an enclosure protection of IP66 or NEMA Type 4x.

Ex marking

Flow sensor approval	Marking
IECEx	Ex ia IIC T6…T2 Gb
ATEX	II 2G Ex ia IIC T6…T2 Gb
DIV 1	Class I, Groups B, C, D, temp class T6…T2
Zone (Canada)	Ex ia IIB+H2 T6…T2 Gb
Zone, ANSI/ISA (USA)	Class I, Zone 1, AEx ia IIB+H2 T6…T2 Gb

Ambient temperature

Version	Ambient temperature (Ta)
Standard version (STD)	-20°C...+65°C
Low ambient temperature (LTA)	-55°C...+65°C

Process temperature

Version	Name	Process temperature (Tp)
Standard version (STD)	UFS 5-R-Ex	-40°C...+120°C
Low process temperature (LT)	UFS 5-R-LT-Ex	-200°C...+120°C
High process temperature (HT)	UFS 5-R-HT-Ex	-40°C...+250°C
High viscosity (HV)	UFS 5-R-HV-Ex	-40°C...+120°C

Temperature class	Maximum process temperature [°C] at T_a = 65°C			
	Standard version	HV version	HT version	LT version
T6	50	50	70	70
T5	85	85	85	85
T4	120	120	120	120
T3	-	-	185	-
T2	-	-	250	-

The temperature limits apply under the following conditions:

- The instrument is installed and operated in accordance with the installation directions given in the manual.
- The instrument is solar protected and is not installed close to an external heat source.

The flow sensor contains the following intrinsic safety circuits:

Circuit	Parameters
Transducer circuit between flow sensor and signal converter	U_i = 18 V
	I_i = 210 mA
	C_i = 100 nF
	L_i = 700 µH
	P_i = 1 W
PT100 circuit between flow sensor and signal converter	U_i = 10 V
	I_i = 10 mA
	P_i = 200 mW

2.3.4 Signal converter markings

The signal converter is certified as group II, category 2G equipment, fitted with non-Ex ia signal in/outputs. It is suitable for installation in gas hazardous areas zone 1 or 2, gas group IIB, temperature class T5 and has an enclosure ingress protection of IP66 or Type 4x.

Ex marking

Signal converter approval	Marking
IECEx	Ex d[ia] IIB T5 Gb
ATEX	II 2G Ex d[ia] IIB T5 Gb
DIV 1	Class I, Groups B, C, D, temp class T5
Zone (Canada)	Ex ia IIB+H2 T5 Gb
Zone, ANSI/ISA (USA)	Class I, Zone 1, AEx d[ia] IIB+H2 T5 Gb

The converter housing is a flameproof/explosionproof enclosure and is available in two variants.

Ambient temperature

Version	Ambient temperature (Ta)

ATEX/IECEx/DIV1/Zone CA/ANSI-ISA EJB-4 ALU & EJBX-4 SS CORTEM enclosure:

Standard version (STD)	-20°C...+55°C
Low ambient temperature (LTA)	-50°C...+55°C

ATEX CXJ 12188 ALU AKRON enclosure:

Low ambient temperature (LTA)	-55°C / -50°C...+55°C

Electrical data

Circuit	Parameters
Power supply (L+, PE, L-)	24 VDC +10%/-15% (max. 40V)
Intrinsically safe multiplexer circuit of signal converter	U_o = 6.51 V
	I_o = 208 mA
	L_o = 1.5 mH
	C_o = 22 µF
	P_o = 0.34 W
PT100 circuit between flow sensor and signal converter	U_o = 4.91 V
	I_o = 5 mA
	L_o = 100 mH
	C_o = 100 µF
	P_o = 10 mW

3.1 Notes on installation

CAUTION!
Inspect the packaging carefully for damages or signs of rough handling. Report damage to the carrier and to the local office of the manufacturer.

INFORMATION!
Do a check of the packing list to make sure that you have all the elements given in the order.

INFORMATION!
Look at the device nameplate to ensure that the device is delivered according to your order. Check for the correct supply voltage printed on the nameplate.

3.2 Storage

Correct storage position

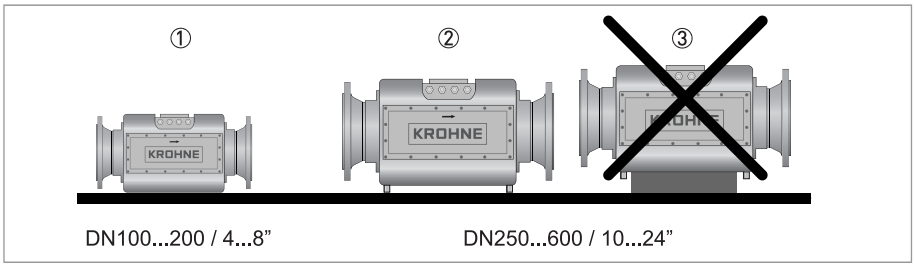

Figure 3-1: Storage

① DN100...200 / 4...8": Put flow sensor on the housing.
② DN250...600 / 10...24": Put flow sensor on supports.
③ DN250...600 / 10...24": Make sure that the flow sensor is always on the supports.

WARNING!
Make sure that the extensions on the bottom of the flanges are in good order to prevent the flow sensor from rolling over. Otherwise take appropriate measures to prevent the meter from rolling over.

Storage conditions

Maintain the following storage conditions to prevent the equipment from corrosion or early failure:

- Humidity: <95 % RH (closed and heated storage area)
- Storage temperature: -40...+65º C / -40...+149º F
- Avoid direct solar radiation during long storage periods, store under a sunshade

How to prevent corrosion

For carbon steel flow sensors / pipes, pay attention to the conservation of the inner pipe wall:

1. For a storage period of less than one year, the inner pipewall of flow sensors and additional delivered piping such as inlets and outlets should be protected by a corrosion inhibitor such as Shell Ensys.
2. For a period of one year or longer, the pipewall of the flow sensor and other piping should be protected by Tectyl or a similar product.

3.3 Transport

WARNING!

- *Even smaller size flow sensors have a considerable weight. Check the weight of your flow sensor in order to select suitable means for transportation and lifting.*
- *Use appropriate materials such as chains or hoisting straps that are in good condition.*
- *Use the eye bolts on the flow sensor body to attach chains or straps to lift the flow sensor (if not present: check the condition of the threaded holes on the flanges and if ok, then install eye bolts in the threaded holes).*
- *Verify local safety regulations, directives and company procedures with respect to hoisting, rigging and transportation of (heavy) equipment.*

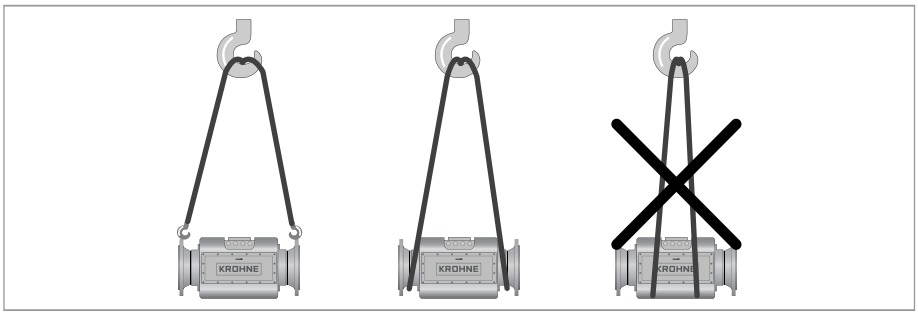

3.4 Pre-installation requirements

INFORMATION!

The equipment is designed for safe operation under the following conditions:

- *Humidity: < 95% RH*
- *Ambient temperature: -55...+55° C / -67...+131° F*
- *Suitable for indoor and outdoor use.*
- *IP66 / NEMA 4X classification.*

3.5 Installation

3.5.1 Mounting position

CAUTION!

- *Install the flow sensor in a horizontal position with the flow arrow indicator on the flow sensor in the direction of the positive (forward) liquid flow.*
- *Do not install the flow sensor at the highest position in the pipe line.*
- *Check the weight of the flow sensor. Typically the weight of the flow sensor will be considerably more than the same length of pipe line. To support the flow sensor additional supports might be needed, preferably on each side of the flow sensor.*
- *If supports can not be placed under the flow sensor flanges, supports may be placed under the mating flanges of the pipeline. If supports can only be placed under the pipeline sections upstream or downstream of the flow sensor, these supports shall be as close as possible to the flow sensor. In this case a calculation shall be made to verify that the load on the pipeline will not exceed acceptable values.*
- *The flow sensor should be installed in the pipeline with gaskets, nuts and bolts according to the type and size of the flanges of the flow sensor. The flanges of the flow sensor should match the flanges of the pipeline where the flow sensor is installed.*
- *Make sure that the gaskets do not protrude into the flow as this can reduce the accuracy of the flow sensor.*
- *The distance between the flanges should be equal to the length of the flow sensor plus gaskets. No excessive force should be necessary to tighten the gaps on either side of the flow sensor.*
- *For tightening the bolts of the flanges, apply a lubricant as required, in accordance with the materials as used and applicable standards.*
- *Tighten the bolts of the flanges with a torque according to the standards applicable to the flanges and materials used.*

3.5.2 Pipe diameters

Ensure that the inner diameter of the upstream pipe matches the specified connection diameter at the flange of the ultrasonic flow sensor within 1%. Contact the manufacturer if the inner diameter deviates more than 1%.
The inner diameter of the downstream pipe must be within 3% of the flow sensor.

CAUTION!
The welds must be grinded to avoid flow disturbances.

3.5.3 Flow conditioners

An additional flow conditioner can be installed upstream of the flow sensor to minimize the influence of upstream perturbations.

CAUTION!
If a flow conditioner is used, it is advised that the flow conditioner, the inlet pipe and the flow sensor are calibrated together.

3.5.4 Inlet and outlet

CAUTION!
The inlet and outlet configurations mentioned are intended as general guidelines.

With flow conditioner for unidirectional use

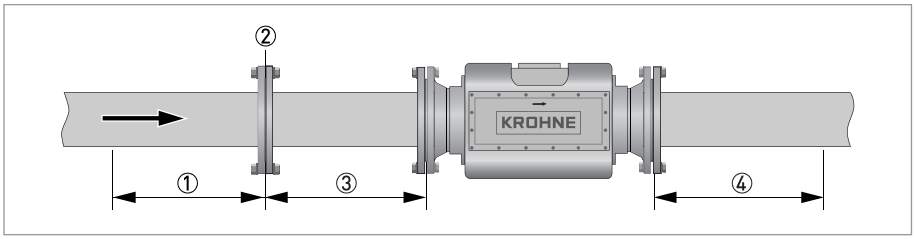

Figure 3-2: Required straight lengths for inlet and outlet

① Inlet section before flow conditioner: 5 DN
② Flow conditioner
③ Inlet section after flow conditioner: 5 DN
④ Outlet section: 3 DN

INFORMATION!
Please note that more straight inlet length will improve overall performance.

With flow conditioner for bidirectional use

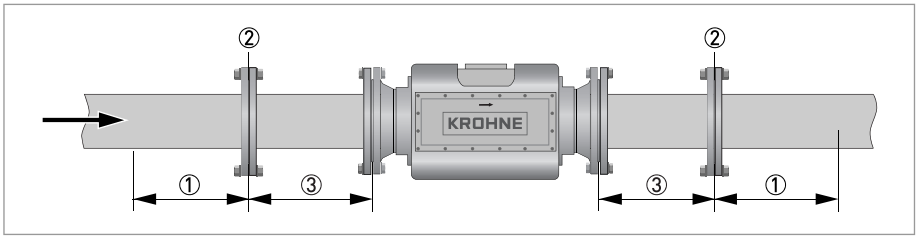

Figure 3-3: Required straight lengths for inlet and outlet

① Section before / after flow conditioner: 5 DN
② Flow conditioner
③ Section after / before flow conditioner: 5 DN

Without flow conditioner

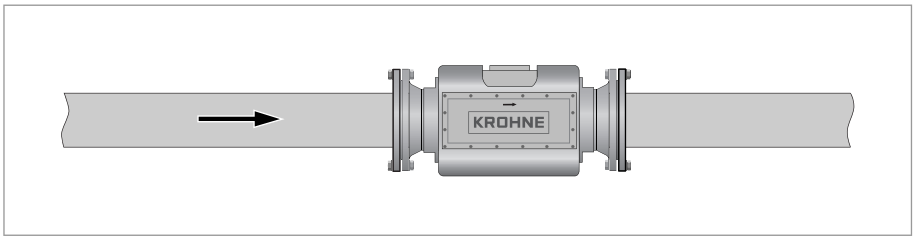

Figure 3-4: Required straight lengths for inlet and outlet

CAUTION!
For applications without flow conditioner, the inlet and outlet lengths depend on the upstream piping arrangement and the liquid conditions (temperature, viscosity, flow rate). Please contact KROHNE for assistance.

3.5.5 Mounting position

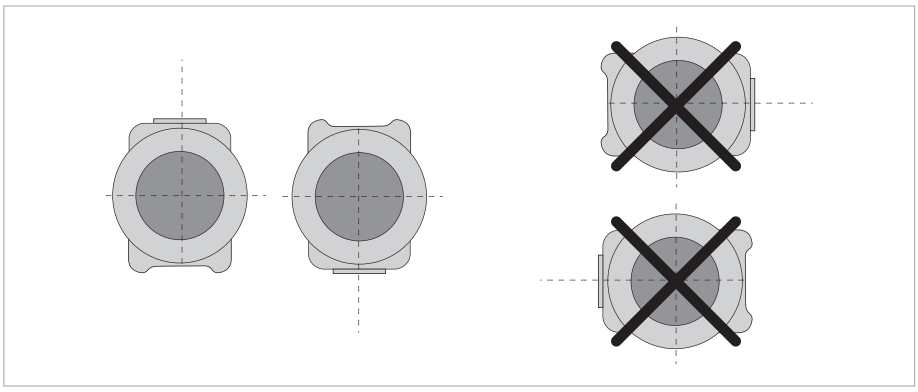

Figure 3-5: Mounting position

3.5.6 Support of the flow sensor

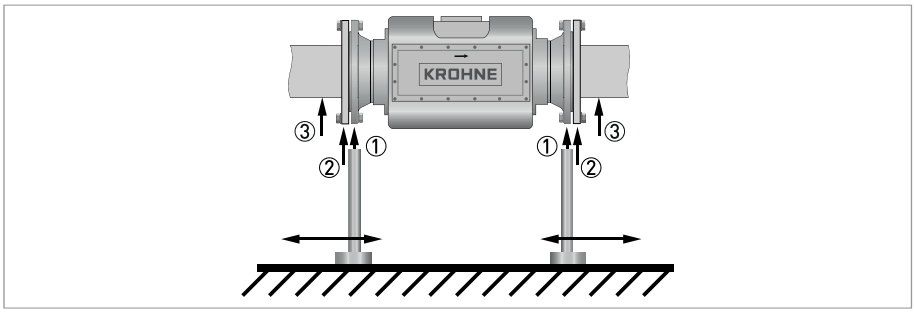

Figure 3-6: Support of flow sensor

① Preferred position of supports under flanges of flow sensor
② If preferred position is not possible, then use the mating flanges to support the flow sensor
③ If both flanges can not be used, then put the supports under the pipeline as close to the flow sensor as possible.

3.5.7 Flange deviation

CAUTION!
Max. permissible deviation of pipe flange faces:
L_{max} - L_{min} ≤ 0.5 mm / 0.02"

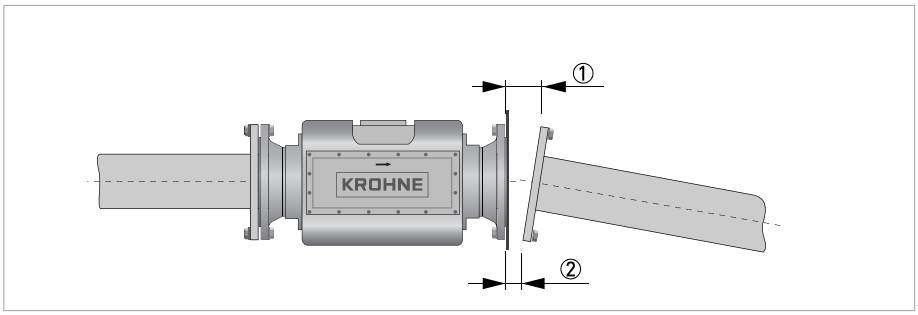

Figure 3-7: Flange deviation

① L_{max}
② L_{min}

3.5.8 Special considerations

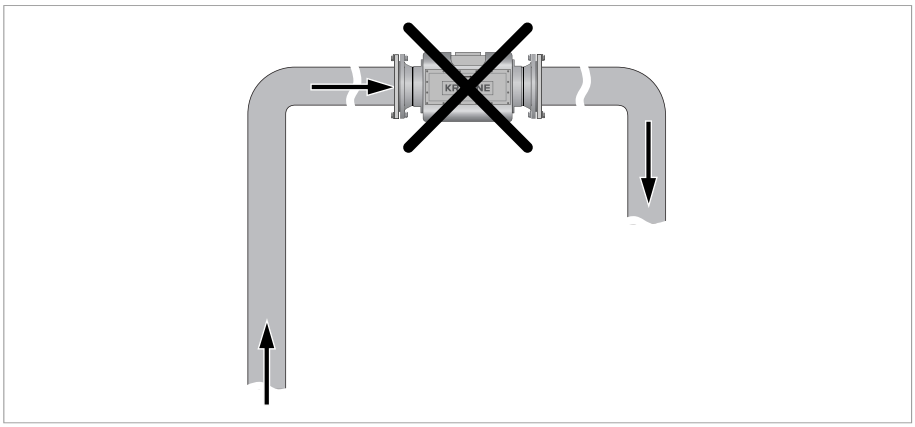

Figure 3-8: No installation at highest point

CAUTION!
Do not install the flow sensor at the highest point, because air can collect there.

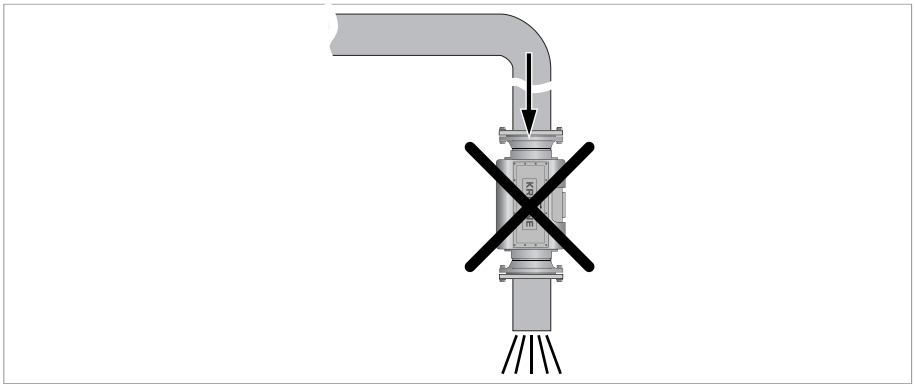

Figure 3-9: No installation in vertical line before free discharge

CAUTION!
Do not install the flow sensor in a vertical line, because it is not sure that the pipe remains fully filled and / or is without vapour.

3.5.9 Air venting

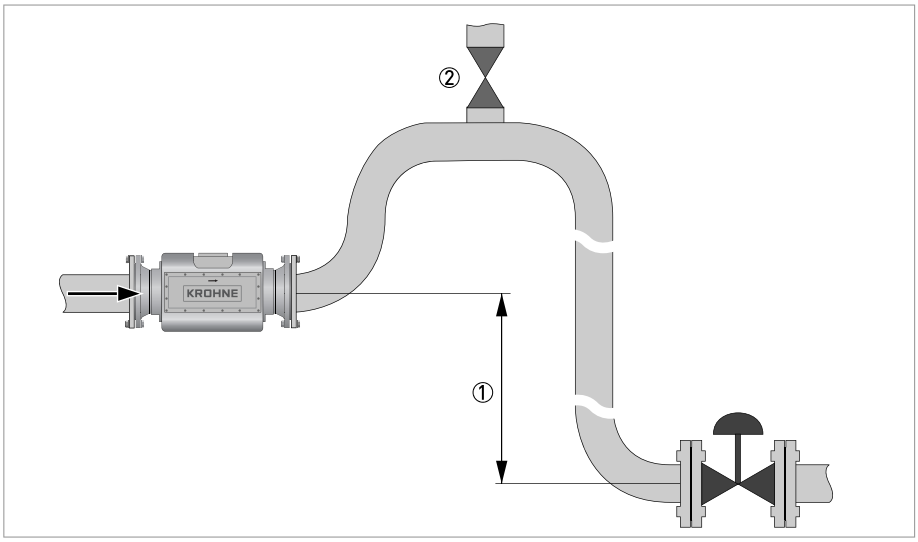

Figure 3-10: Air venting

① ≥ 5 m
② Air ventilation point

3.5.10 Pressure and temperature sensors

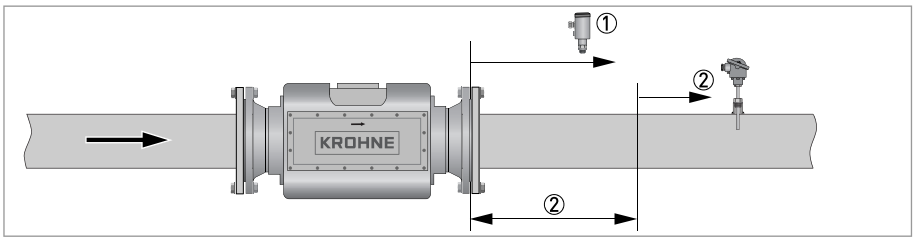

Figure 3-11: Location of pressure and temperature transmitters

① Install the pressure transmitter downstream of the flow sensor
② Install temperature transmitter at minimum 3 DN downstream of the flow sensor

CAUTION!
If a bi-directional flow is used, then install the temperature transmitter at a distance of 10 DN of the flow sensor.

3.6 Backpressure

To prevent flashing / cavitation in the flow sensor, it should be installed in such a way that the flow sensor is always fully filled and has enough back pressure. As a guide line, the pressure should not go below the minimum limit as shown in the following graph.

To calculate the minimum required pressure in the pipeline to avoid flashing, you have to know the vapour pressure of the process liquid and add it to the pressure, found in the next figure.

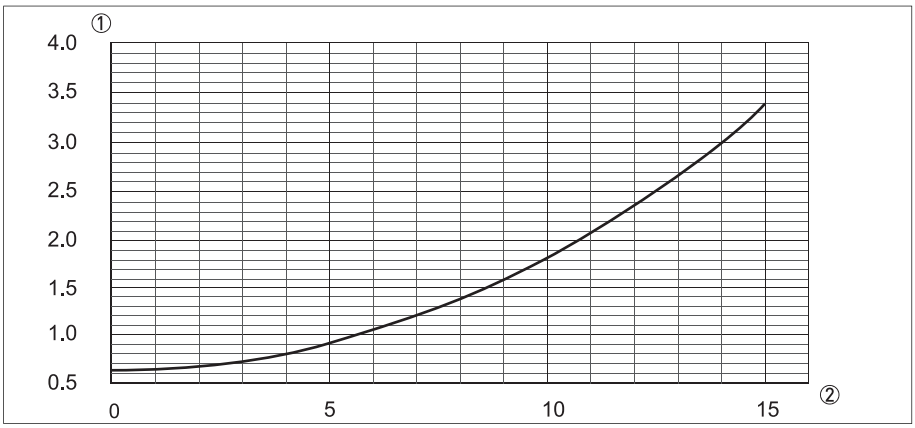

Figure 3-12: Needed pressure above vapour pressure

① ΔP [bar]
② Velocity [m/s]

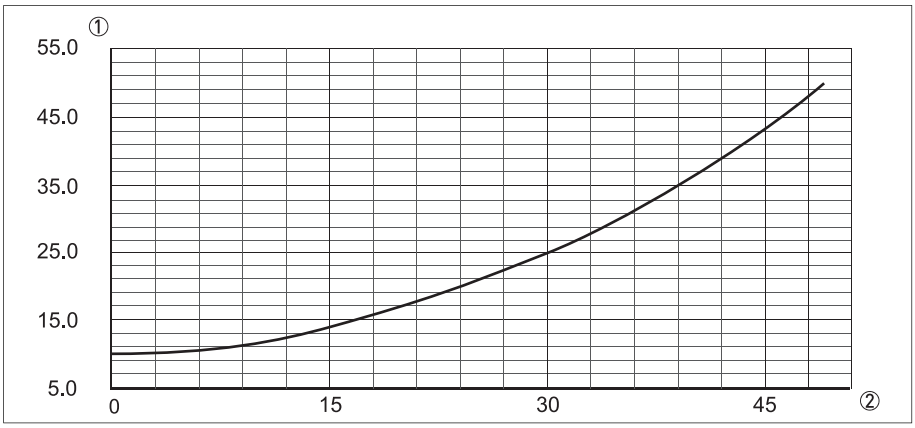

Figure 3-13: Needed pressure above vapour pressure

① ΔP [psi]
② Velocity [ft/s]

Example for crude oil, at velocity of 10 m/s:
① In technical documentation, find the vapour pressure P_v of crude oil. This is 0.7 bar(a).
② In the figure above, find the ΔP value at 10 m/s. This ΔP value is 1.8 bar.
③ Calculate the minimum required pressure $\mathbf{P_{min}} = P_v + \Delta P$. This will result in 0.7 + 1.8 = 2.5 bar as a minimum pressure for the pipe line.

3.6.1 Open discharge

INFORMATION!
Note that with open discharge, there is almost no back pressure, so this can only be used at relatively low flows of 3...5 m/s. See also next paragraph to gain more back pressure.

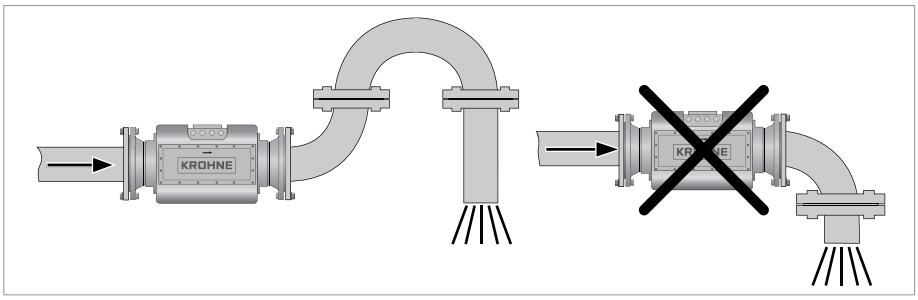

Figure 3-14: Installation in front of an open discharge

3.6.2 Control valve

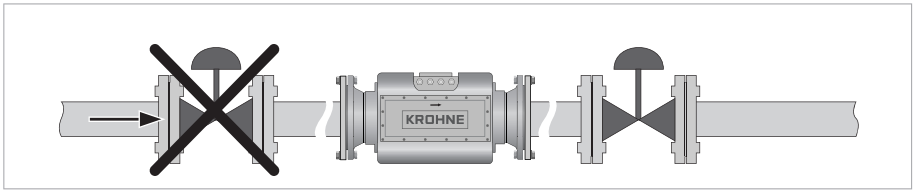

Figure 3-15: Installation in front of a control valve

INFORMATION!
Downstream of a valve there is low pressure and high flow disturbance. Therefore it is best practice to install the control valve downstream of the flow sensor.

3.6.3 Pump

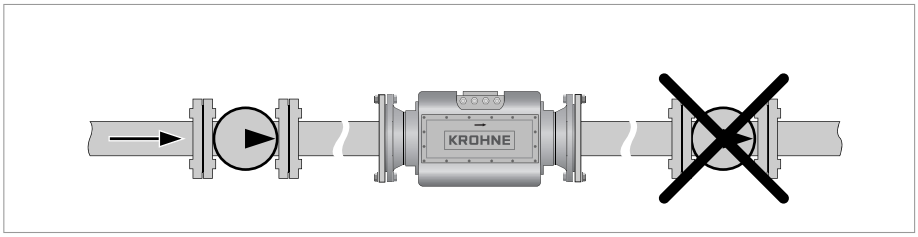

Figure 3-16: Installation behind a pump

INFORMATION!
Upstream of the pump, there is suction which leads to low pressure. Downstream of the pump, the line is pressurised.

3.7 Sunshades

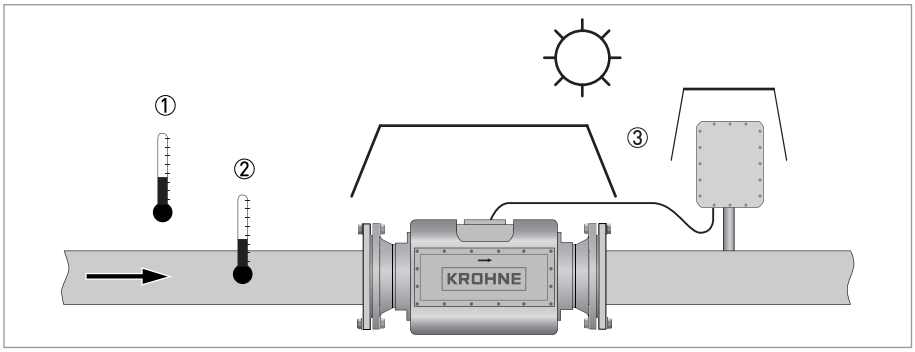

Figure 3-17: Temperatures

① Ambient temperature
② Process temperature
③ Use a sunshade to protect the flowmeter against direct solar radiation

CAUTION!
Direct solar radiation causes temperature gradients in the metering section and must be avoided as much as possible. Use a sunshade or canopy to protect the flowmeter and the pressure and temperature transmitters against direct sunshine. Another option is to thermally insulate the complete metering section including the transmitters.

4.1 Safety instructions

DANGER!
All work on the electrical connections may only be carried out with the power disconnected. Take note of the voltage data on the nameplate!

DANGER!
Observe the national regulations for electrical installations!

WARNING!
Observe without fail the local occupational health and safety regulations. Any work done on the electrical components of the measuring device may only be carried out by properly trained specialists.

INFORMATION!
Look at the device nameplate to ensure that the device is delivered according to your order. Check for the correct supply voltage printed on the nameplate.

DANGER!
For DIV1 installations, cables must be used that are resistant to high temperatures.
For all other applications, cable must be used that are resistant to high temperatures if the process temperature is 65° C (149° F) or higher.

DANGER!
For the flow sensor and the signal converter that are used in a potentially explosive atmosphere, obey the following rules:

- *If the device is used in category 2G, certified cable entry devices MUST be used.*
- *Unused openings MUST be closed with certified closing elements.*
- *To avoid voltage and current addition, the intrinsically safe circuits must be separated and wired to EN 60079-14.*

4.2 Overview of electrical installation

An overview of a typical connection diagram is shown below.

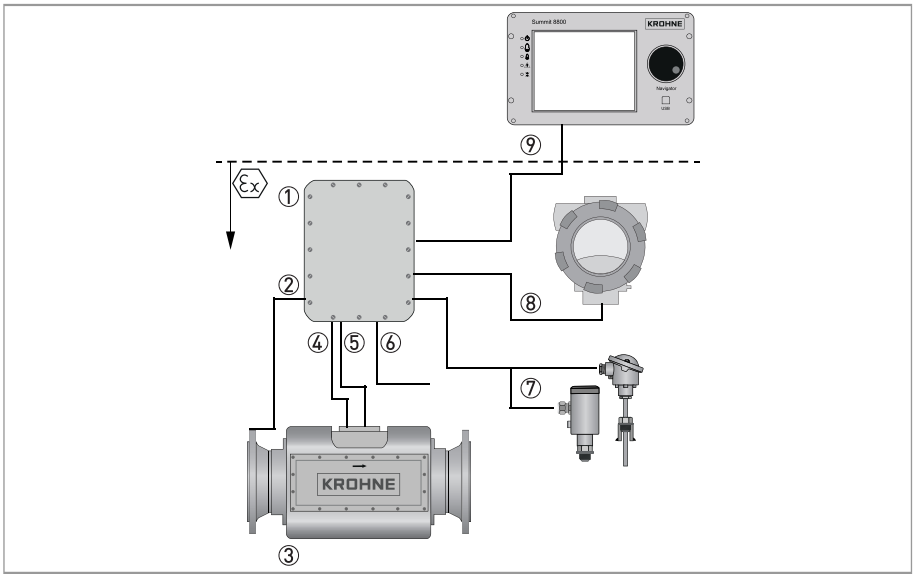

Figure 4-1: Overview electrical connections

① Signal converter
② Equipotential bonding wire (> 4 mm^2)
③ Flow sensor
④ Connection of body temperature (supplied with delivery)
⑤ Connection of three signal cables of flow sensor (supplied with delivery)
⑥ Power supply
⑦ Pressure and / or temperature transmitters (optional)
⑧ Display (optional)
⑨ Flow computer (optional) via:
- RS485, MODBUS
- Pulse / frequency

4.3 Opening the covers

WARNING!
the following instructions must always be carefully followed, if the housing of the signal converter has to be opened respectively closed again.

Before opening:

- Make absolutely sure that there is no explosion hazard!
- Make sure that all connecting cables are safely isolated from all external sources!
- Allow the electronics to de-energize before opening the electronics compartment of the signal converter housing. Wait at least 30 minutes for T6...T4 before opening.

4.3.1 Flow sensor

The connection box of the flow sensor can be opened to make all electrical connections. Before start-up of the flowmeter, a notified body has to seal it, after which it can not be opened anymore.
The side panels of the flow sensor are equipped with a sealing device to prevent unauthorized opening and removal of the cover.

4.3.2 Signal converter

WARNING!

- *In order to prevent unauthorized opening of the converter lid, a sealing device is provided. Before a lid can be opened, release this sealing device.*
- *The bottom of the converter housing provides an earthing point, this must be connected to the nearest safety earth conductor.*
- *Only open the converter housing one minute after the power has been switched off and after it has been verified that there is no risk due to the presence of potentially explosive gas.*

The lid of the signal converter is equipped with a sealing device to prevent unauthorized opening and removal of the lid.

4.4 How to use the cable glands

DANGER!
The cable glands in this device have a safety function for hazardous areas. Make sure that they are used in the correct way.

CAUTION!
Three different types of cable glands are used. Make sure that the correct cable gland is used for the specific cable.

INFORMATION!
Three different types of cable glands that are used. However, the way of working is very simular for all types.

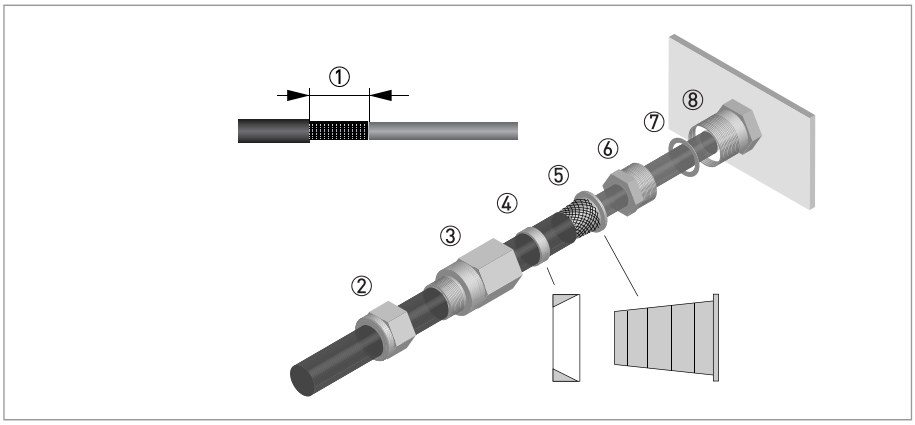

Figure 4-2: Preparation of cable and installation

① Strip cable, make sure that 20 mm / 0.78" of shielding is available.
② Back nut
③ Mid cap
④ Clamp
⑤ Cone
⑥ Compression nut
⑦ Washer
⑧ Entry body

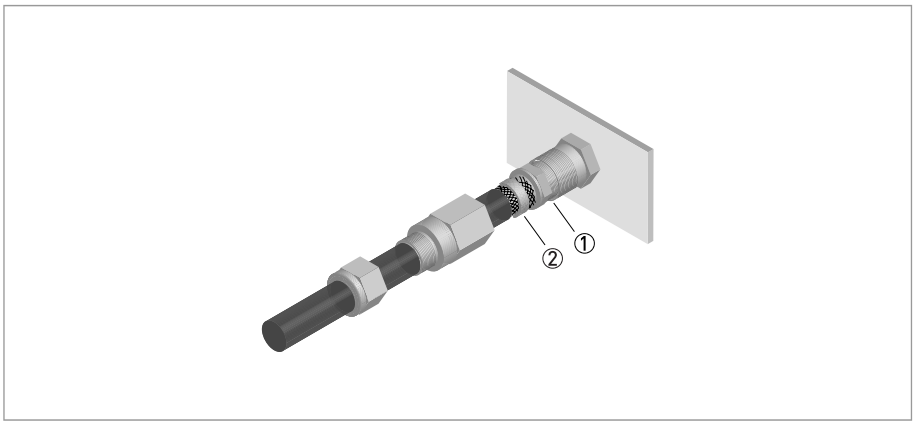

Figure 4-3: Put the shielding, the cone and the clamp in position

① Slide the cone under the shielding.
② Slide the clamp over the shielding.

CAUTION!
Make sure that the shielding makes a good electrical contact with the cone and the clamp to ensure a good EMC shielding. A bad electrical contact could lead to reduced measurement accuracy.

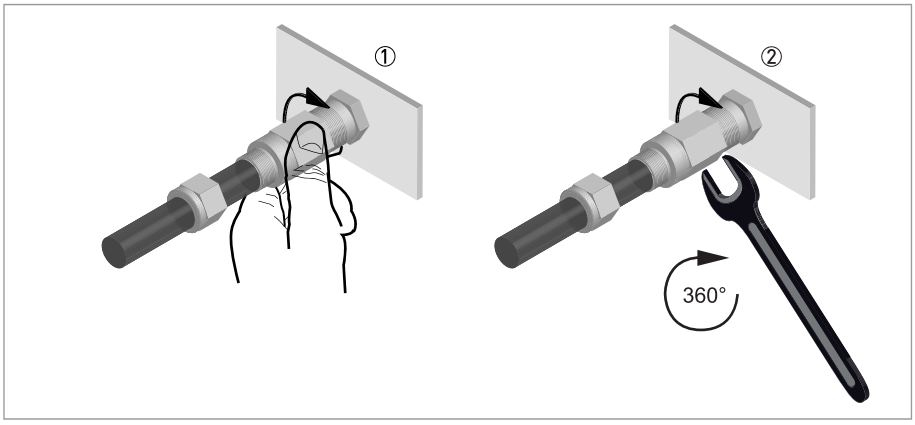

Figure 4-4: Tighten the mid cap

① Hand tighten the mid cap.
② Use a wrench to tighten the mid cap one 360° turn.

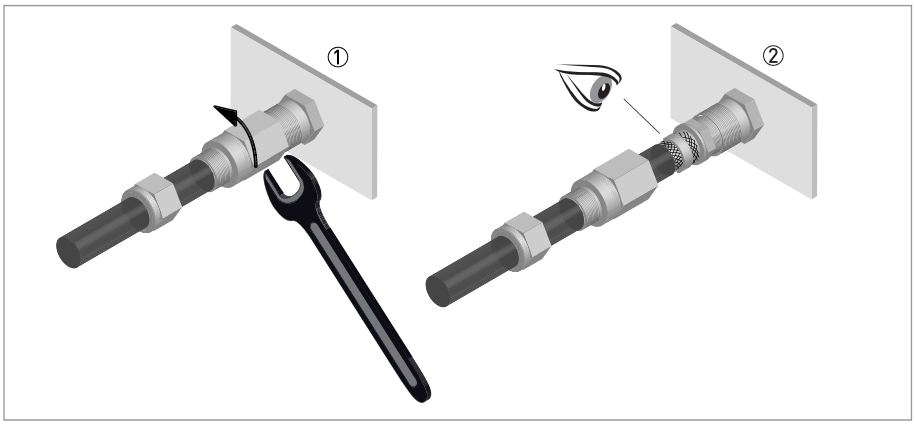

Figure 4-5: Visual check of position of clamp

① Untighten the mid cap.
② Check if the shielding is clamped securely.

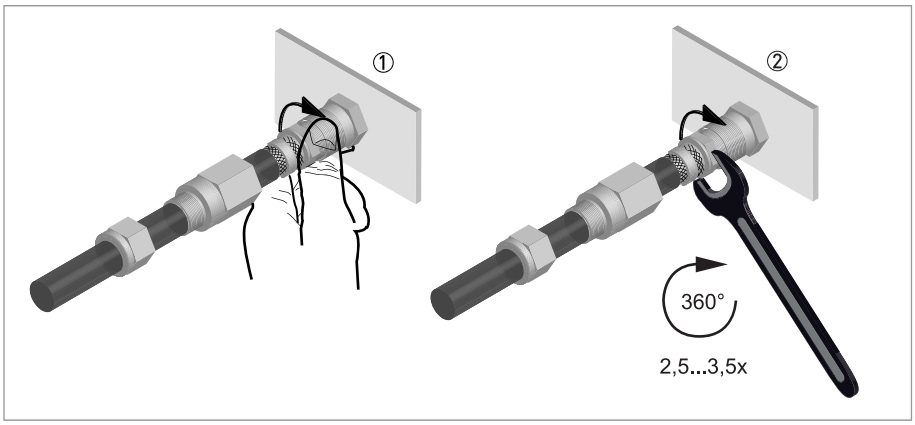

Figure 4-6: Tighten the compression nut

① Hand tighten the compression nut.
② Use a wrench to tighten the compression nut 2.5...3.5 turns.

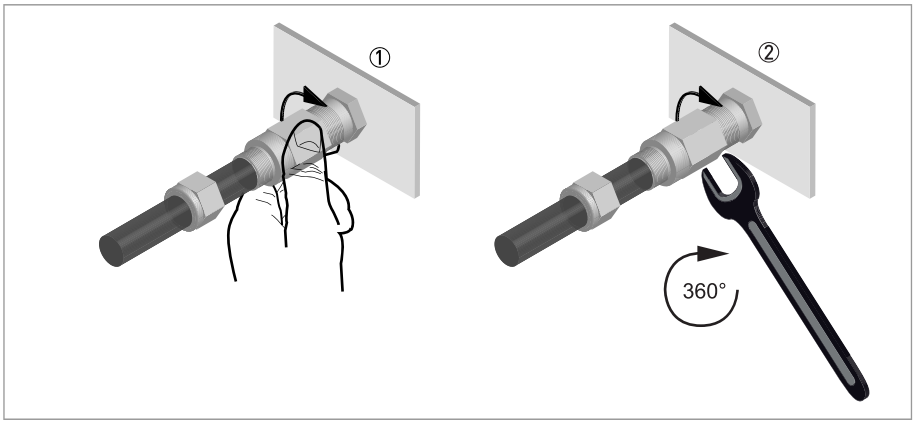

Figure 4-7: Tighten the mid cap

① Hand tighten the mid cap.
② Use a wrench to tighten the mid cap one 360° turn.

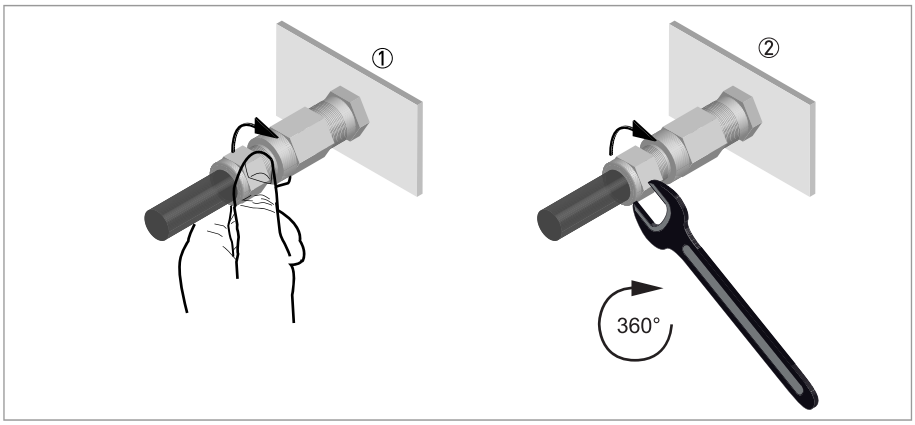

Figure 4-8: Tighten the back nut

① Hand tighten the back nut.
② Use a wrench to tighten the back nut one 360° turn.

INFORMATION!
Use the reverse order if the cables must be loosened from the cable glands.

4.5 Flow sensor connections

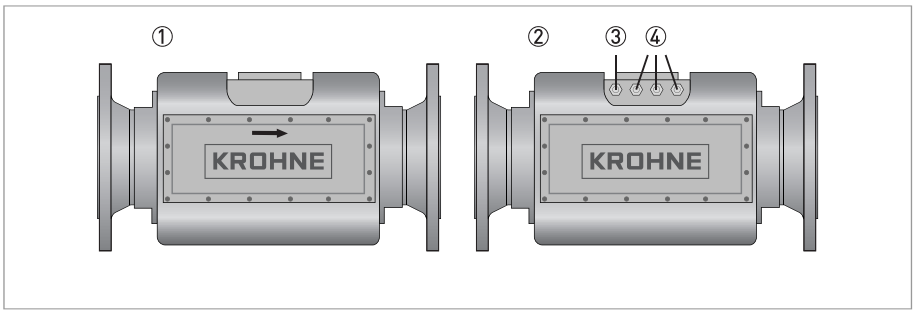

Figure 4-9: Location of cable glands

① Front side of the flow sensor
② Back side of the flow sensor
③ Cable entry for the PT100 cable
④ Cable entry for the signal cables

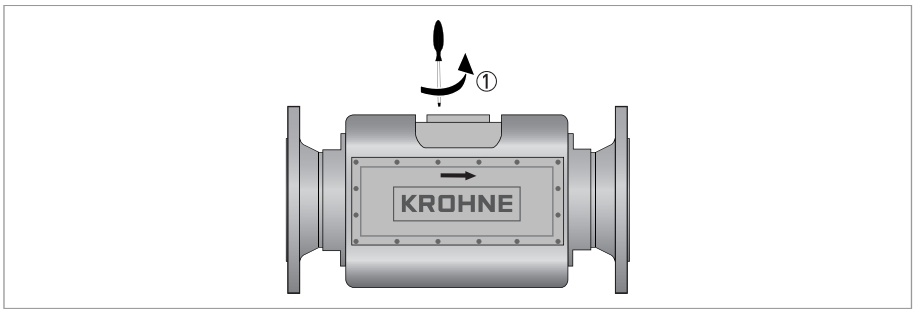

Figure 4-10: Removal of cover

① Loosening of screws to remove the cover

Use the factory supplied **sensor signal cables** to make the electrical connection between the flow sensor and the signal converter.
Each cable has six coaxial cables with pre-assembled SMB conectors. Lead the cable through the cable gland and connect it to terminal strip X1 as shown. All cables are numbered in the same way as the connector. Three cables are supplied, which means that two of the pre-assembled coax cables with SMB connectors will not be used.

Use the factory supplied **PT100 cable** to make the electrical connection between the flow sensor and the signal converter. Connect the numbered wires of the cable to terminal strip X2 with the same numbers.
This cable has four wires for temperature measurement. Feed the cable through the cable entry and connect it as shown. All wires are numbered in the same way as connector X2.

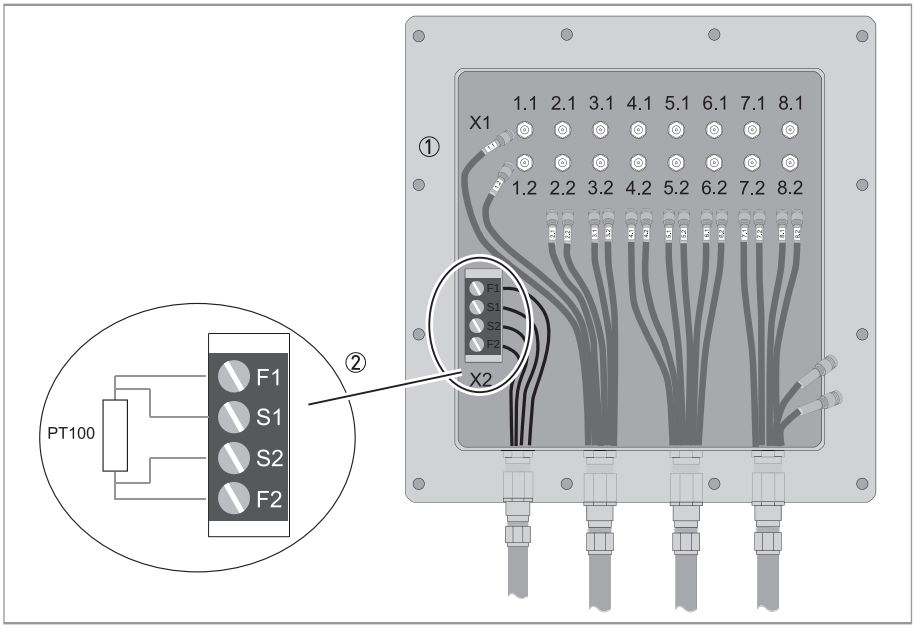

Figure 4-11: Electrical connections of flow sensor

① Terminal strip X1 for sensor signal cables.
② Terminal strip X2 for PT100 cable.

4.6 Signal converter connections

DANGER!
For the flow sensor and the signal converter that are used in a potentially explosive atmosphere, obey the following rules:

- *If the device is used in category 2G, certified cable entry devices MUST be used.*
- *Unused openings MUST be closed with certified closing elements.*
- *To avoid voltage and current addition, the intrinsically safe circuits must be separated and wired to EN 60079-14.*

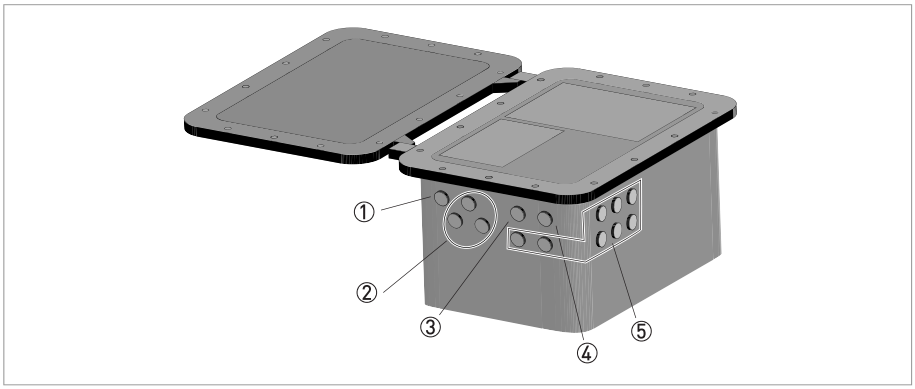

Figure 4-12: Location of cable glands

Number in Figure	Cable entry	Connection
①	PT100 cable, included in delivery	refer to *Multiplexer board (MUX) connections* on page 40
②	Sensor signal cable, included in delivery	refer to *Multiplexer board (MUX) connections* on page 40
③	Power supply cable, not included in delivery	refer to *Power Supply Board (PSB)* on page 52
④	Optional power supply cable for heating	-
⑤	I/O connections	refer to *Smart IO board (SMART IO) connections* on page 42

DANGER!
Make absolutely sure that only certified cable glands, shielded cables and blind plugs are installed!

4.6.1 Multiplexer board (MUX) connections

The sensors and the body temperature sensor are connected to the MUX.

Use the factory supplied **sensor signal cables** to make the electrical connection between the flow sensor and the signal converter.
Each cable has six coaxial cables with pre-assembled SMB connectors. Lead the cable through the cable gland and connect it to the card as shown. All cables are numbered in the same way as the connector. Three cables are supplied, which means that two of the pre-assembled coax cables with SMB connectors will not be used.

Use the factory supplied **PT100 cable** to make the electrical connection between the flow sensor and the signal converter. Connect the numbered wires of the cable to the connector with the same numbers.

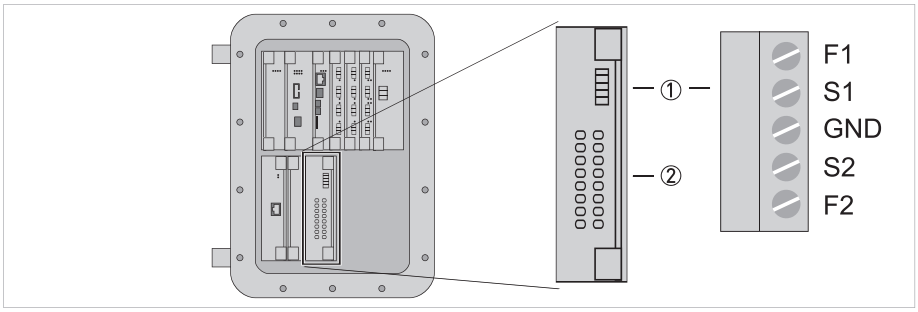

Figure 4-13: Multiplexer

① Connections for body temperature correction
② Connections of transducers of flow sensor

INFORMATION!
The GND terminal is not used, do not connect it.

4.6.2 Monitoring Configuration and Diagnostics (MCD) board connections

The MCD board contains the log file on an SD card as well as the configuration stored on an internal flash memory. TCP/IP can be used as Modbus over TCP/IP.

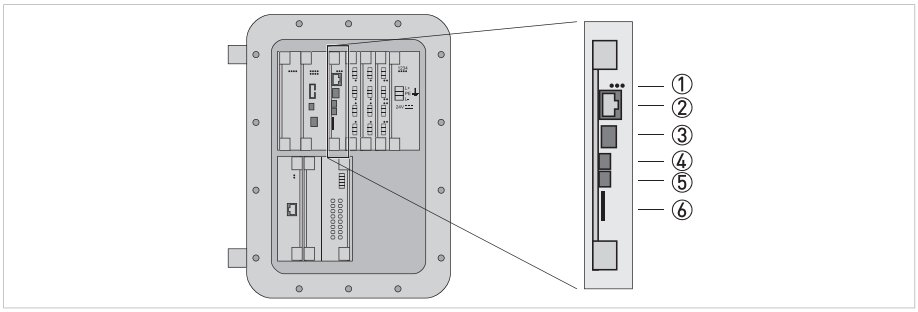

Figure 4-14: ALTOSONIC 5 MCD board

① Status lights, from left to right:
Red status 1
Red status 2
Green MCD power supply OK
② Ethernet connection 10/100 Mb
③ USB (only for service purposes by KROHNE service engineers)
④ mini USB (only for service purposes by KROHNE service engineers)
⑤ mini USB for configuration tool
⑥ SD card

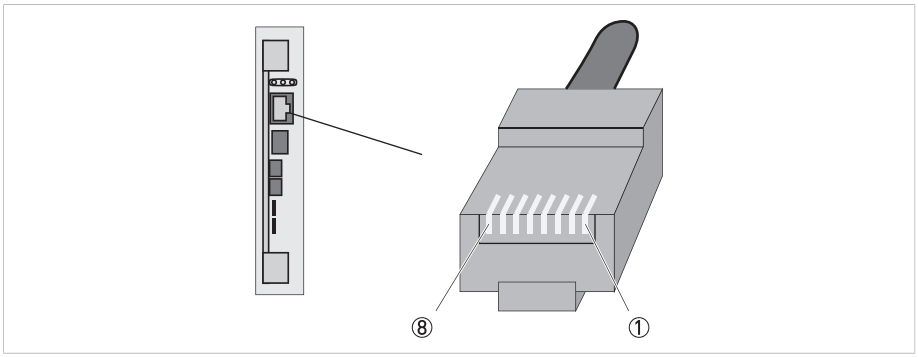

Figure 4-15: Ethernet RJ45 connector pin 1...8

RJ45 Ethernet connection pin	Wire color (T568A)	Wire color (T568B)	Function
1	white/green	white/orange	Transmit +
2	green	orange	Transmit -
3	white/orange	white/green	Receive +
4	blue	blue	Not used
5	white/blue	white/blue	Not used
6	orange	green	Receive -
7	white/brown	white/brown	Not used
8	brown	brown	Not used

4.6.3 Smart IO board (SMART IO) connections

The SMART IO board has multiple configurable IO's. The smart IO's can be configured either as digital input/output or analog input/output. All functions use the same connections. The function is defined by the chosen configuration.

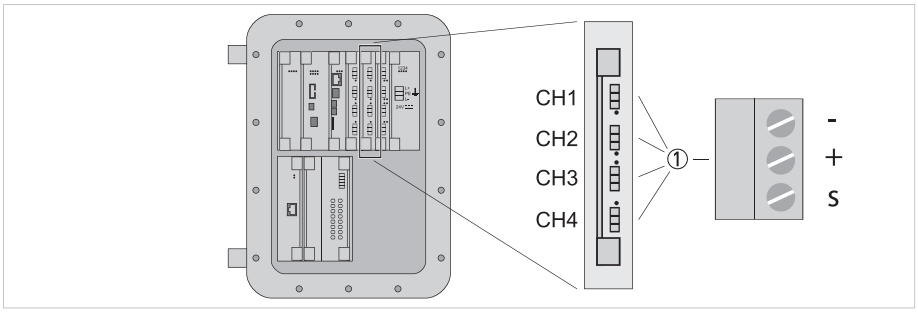

Figure 4-16:

① 4x configurable IO connection

Status lights for each channel

Function of LED	Meaning
Off	Channel is inactive
Slow short blinking	Channel not configured
Slow long blinking	Normal operation
Fast blinking	Channel is configured, but not connected correctly
Continuous on	An error occured

INFORMATION!

- *Passive mode: If a passive external device is connected, an external power supply is necessary to operate the connected devices (U_{ext}). If an active external device is connected, it can be connected directly.*
- *Active mode: The signal converter supplies the power to operate the connected passive devices, observe max. operating data. The maximum quantity of active outputs is limited to four.*
- *Terminals that are not used should not have any conductive connection to other electrically conductive parts.*

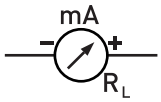	mA meter 0...20 mA or 4...20 mA and other R_L is the internal resistance of the measuring point including the cable resistance
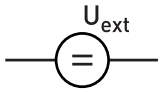	DC voltage source (U_{ext}), external power supply, any connection polarity
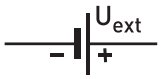	DC voltage source (U_{ext}), observe connection polarity according to connection diagrams
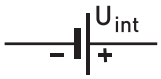	Internal DC voltage source
	Controlled power source
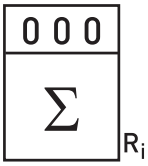	Electronic or electromagnetic counter At frequencies above 100 Hz, shielded cables must be used to connect the counters. R_i is the internal resistance of the counter

Table 4-1: Description of symbols

Inputs and outputs

Inputs and outputs can be configured in the MCD tool as described below. The limits of currents and voltage can be configured in the MCD per IO. Limitation of these adjustable values are:

- U_{int} = 3...23 V
- I_{max} < 25 mA

Active frequency output

The active output can be connected to a passive external instrument.

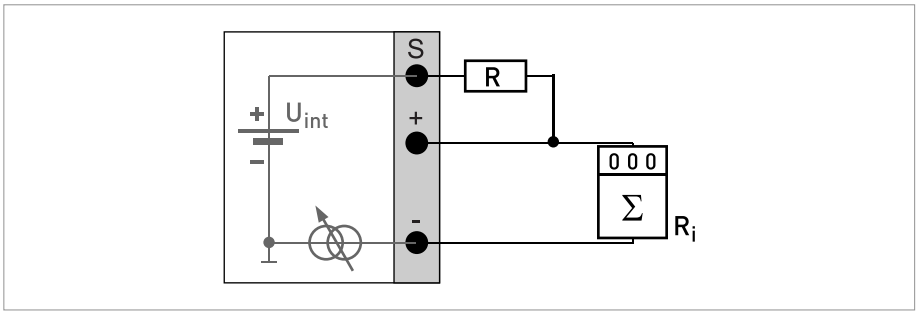

Figure 4-17: Frequency output, active

- Use terminals 'S' (Supply), '+' and '-'
- R: 1 kΩ (use resistor R to lower the resistance if the value is too high)

Passive frequency output

The passive output can be connected to a passive external device with an external power supply or directly to an active device.

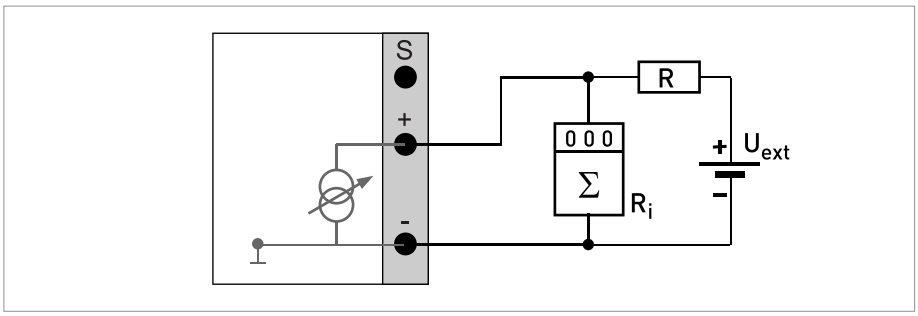

Figure 4-18: Frequency output, passive

- Use terminals '+' and '-'
- $U_{ext} \leq 27$ V

Active digital input

The active digital input can be connected to a passive external device.

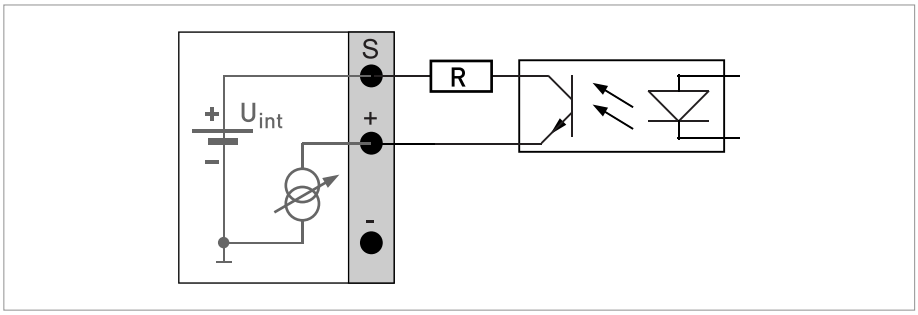

Figure 4-19: Digital input, active

- Use terminals 'S' (Supply) and '+'
- R: 1 kΩ

Passive digital input

The passive input can be connected to a passive external device with an external power supply or directly to an active device.

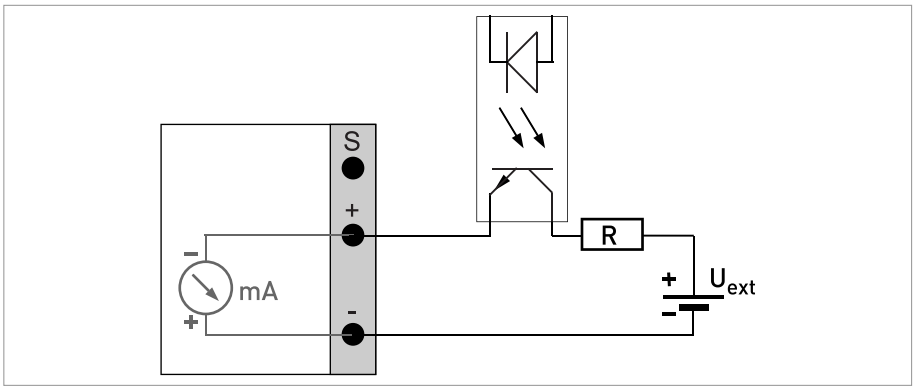

Figure 4-20: Digital input, passive, highside connection

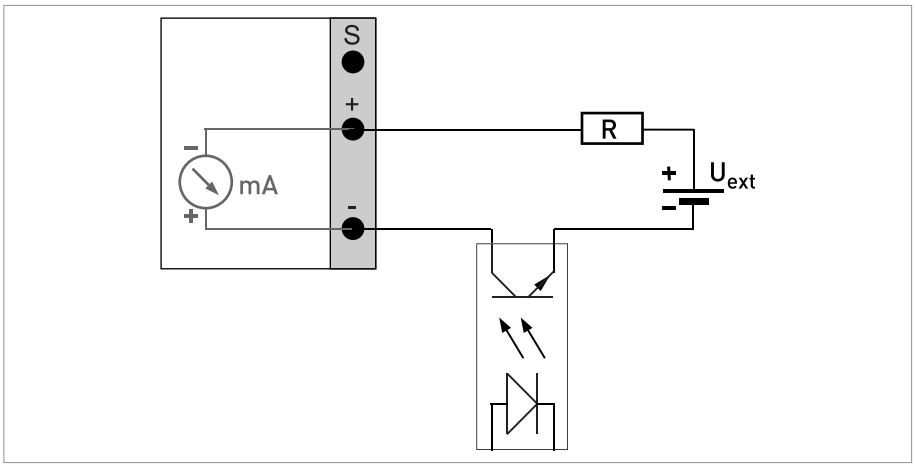

Figure 4-21: Digital input, passive, lowside connection

- Use terminals '+' and '-'
- $U_{ext} \leq 27$ V

Active digital output

The active output can be connected to a passive external device.

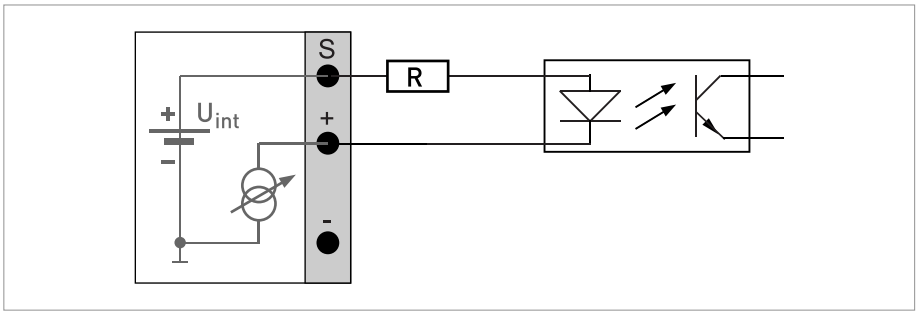

Figure 4-22: Digital output, active

- Use terminals 'S' (Supply) and '+'

Passive digital output

The passive output can be connected to a passive external device with an external power supply or directly to an active device.

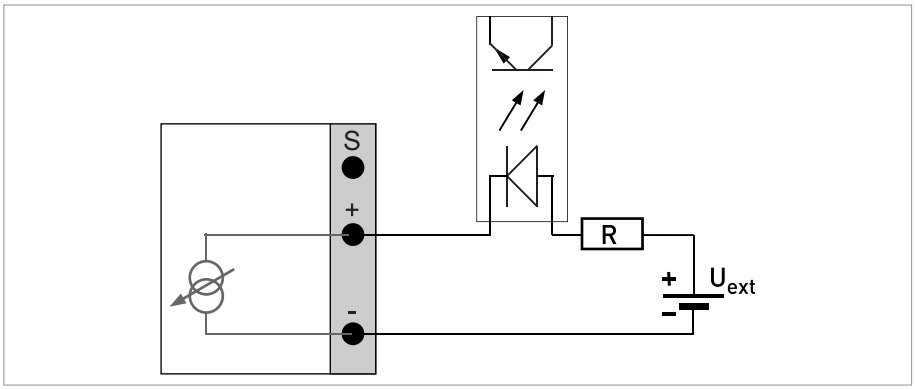

Figure 4-23: Digital output, passive, highside connection

- Use terminals '+' and '-'
- $U_{ext} \leq 27$ V

Active analog output

The active output can be connected to a passive external device.

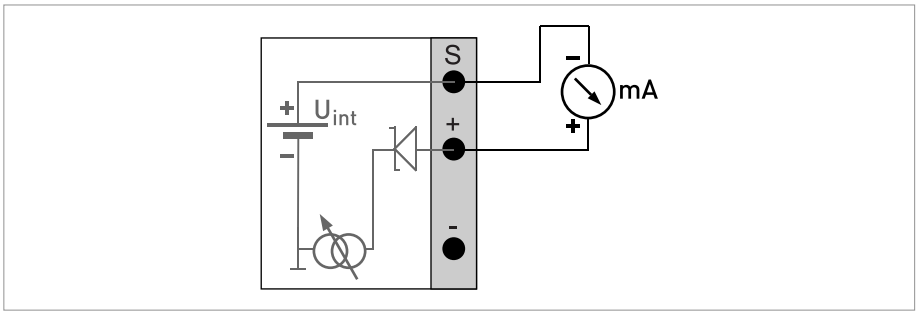

Figure 4-24: Analog output, active

- Use terminals 'S' (Supply) and '+'

Passive analog output

The passive output can be connected to a passive external device with an external power supply or directly to an active device.

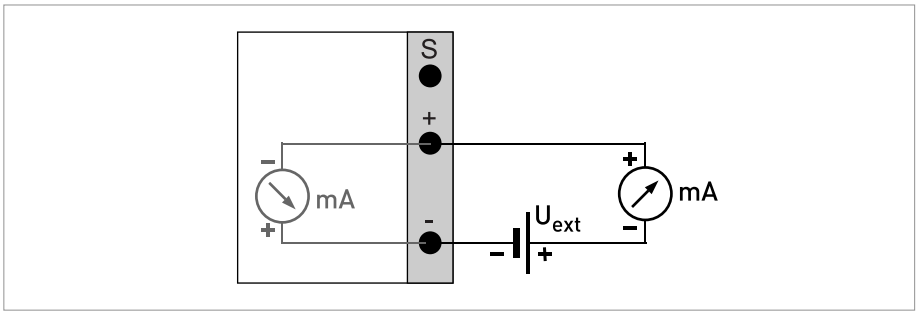

Figure 4-25: Analog output A, passive

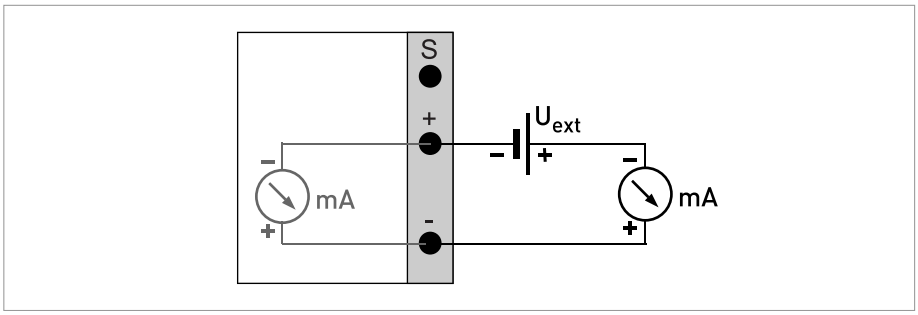

Figure 4-26: Analog output B, passive

- Use terminals '+' and '-'
- $U_{ext} \leq 27$ V

Active analog input

The active input can be connected to a passive external device.

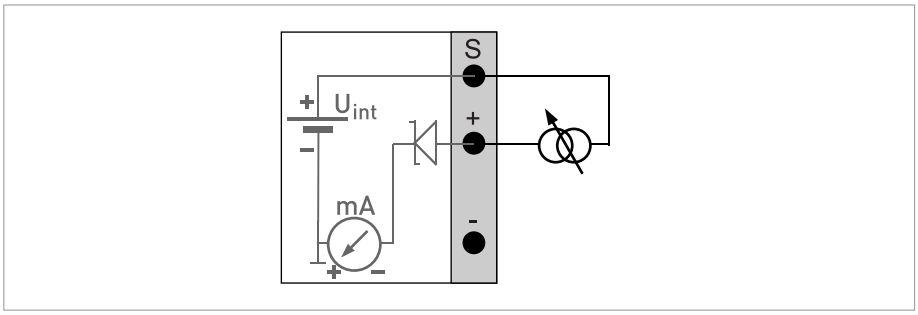

Figure 4-27: Analog input, active

- Use terminals 'S' (Supply) and '+'

Passive analog input

The passive output can be connected to a passive external device with an external power supply or directly to an active device.

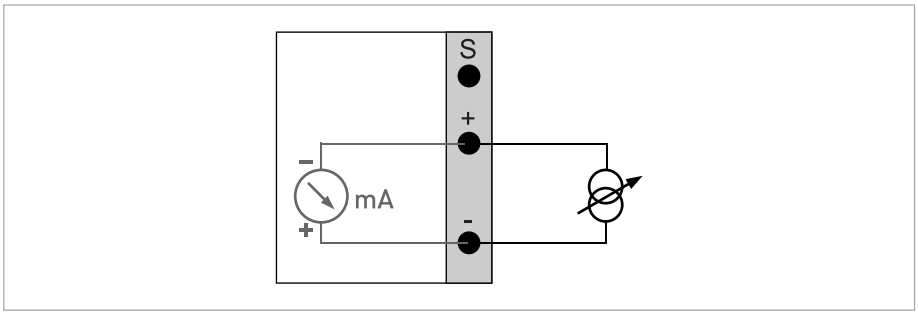

Figure 4-28: Analog input A, passive

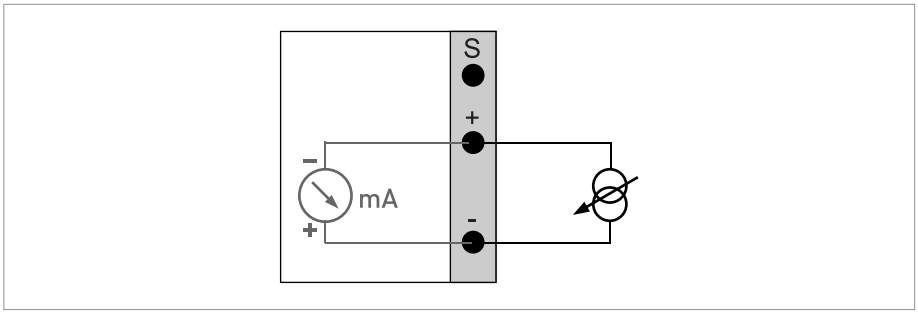

Figure 4-29: Analog input B, passive

- Use terminals '+' and '-'
- U_{max} = 27 V

4.6.4 RS485 IO board connections

The RS485 IO board has 4 serial communication channels. These channels are RS485 type of communication, the channel can be chosen as being slave or master in the configuration.

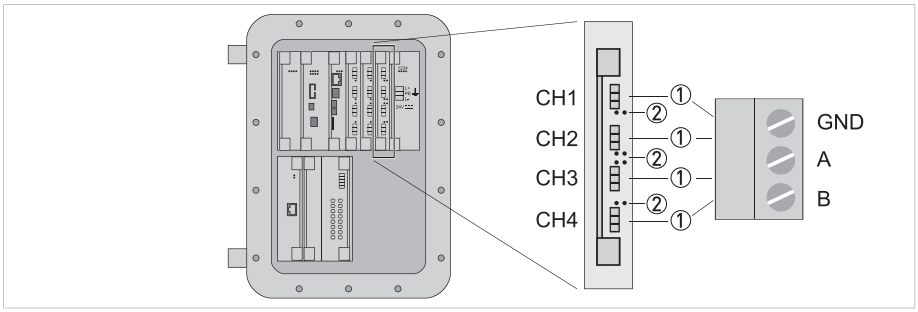

Figure 4-30: ALTOSONIC 5 RS485 IO board

① 4x RS485 connection
② 8x status LED for RS485 IO board

Status lights for each channel

Function of LED	Meaning
Off	Channel is inactive
Slow short blinking	Channel not configured
Slow long blinking	Normal operation
Fast blinking	Channel is configured, but not connected correctly
Continuous on	An error occured

All RS485 channels are galvanically isolated. The standard configuration is as follows:

- CH1: Modbus Master
- CH2: Modbus Slave 1
- CH3: Modbus Slave 2
- CH4: Backwards compatible for Ultrasonic Flow Processor ALTOSONIC V

A terminal resistor should be used if the cable is longer than 10 meter and high speed communication is used. To connect the termination resistor, a jumper must be set, that can be found on the communication board as shown in the next figure.

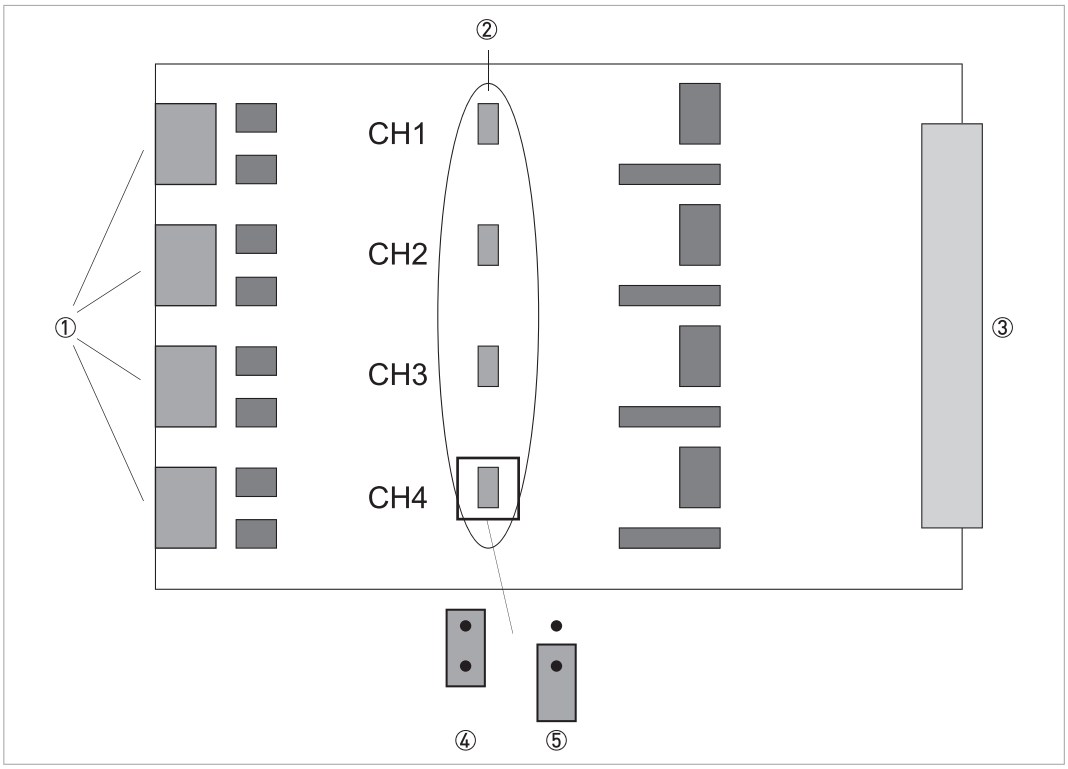

Figure 4-31: Jumpers on Communication board

① I/O connectors that are accessible on the front
② Jumpers (one for each I/O connector)
③ Multipole connector which connects the PCB to the backplane
④ Jumper is used: channel is terminated
⑤ Jumper is not used: channel is not terminated (factory default setting)

4.6.5 Power Supply Board (PSB)

The PSB supplies isolated power to all cards installed in the signal converter.

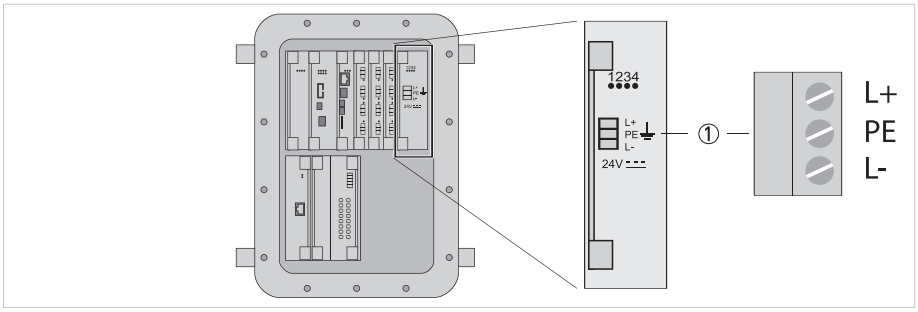

Figure 4-32: ALTOSONIC 5 PSB board

① Power Supply connections 24 V DC (+10/-15%)

CAUTION!
Do not switch on the power yet!

4.6.6 Digital Processor Board (DPB)

The DPB calculates the flow for the flowmeter. This card can be sealed to protect the Custody Transfer security of the flowmeter. For more details, refer to *MCD tool* on page 57.

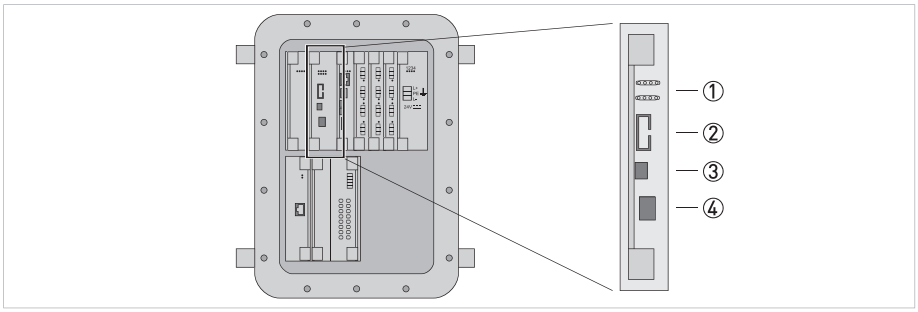

Figure 4-33: ALTOSONIC 5 DPB

① Status lights:
. Upper row, left to right:
Green FPGA configuration OK
Green internal power OK
Green DPB power supply -6 V OK
Green DPB power supply +6 V OK
. Lower row, left to right: Red status lights
② Internal service connector (KROHNE purpose only)
③ Debug interface (KROHNE purpose only)
④ Dip switches, from top to bottom:
1: CT parameters. Left position: locked; right-hand position: unlocked
2: Factory test. Must always be in the left position
3: Not used
4: Not used

4.6.7 Power Supply Board Intrinsically Safe (PSB IS)

This board has only internal connections and serves as a certified EX(i) power supply for the intrinsically safe part of the signal converter.

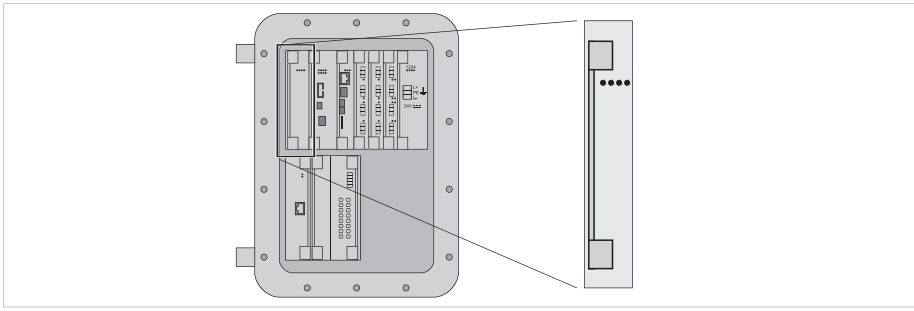

Figure 4-34: Intrinsically safe power supply

① 4x Power supply ok light
a. +DC/DC ok green
b. -DC/DC ok green
c. +Vmux ok orange
d. -Vmux ok orange

4.6.8 Analog Processor Board (APB)

The APB is the interface between the Multiplexer and the DPB and is installed in the intrinsically safe part of the signal converter.

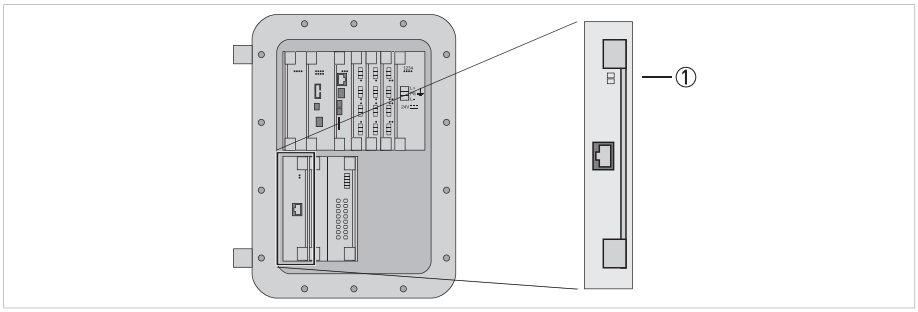

Figure 4-35: ALTOSONIC 5 Analog Processor Board

① 2x Status led (red):
- Status 1
- Status 2

4.7 Equipotential bonding

- The flow sensor UFS 5, the signal cables, the PT100 cable and the UFC 5 F signal converter must all be included in the equipotential bonding system of the hazardous area. If a single separate conductor is used for equipotential bonding, then use a cable with a cross section of at least 4 mm^2 copper.

5.1 Switching on the power

Before connecting to power, please check that the system has been correctly installed:

- The flowmeter must be installed in a mechanically safe way and in compliance with the regulations.
- All electrical connections must have been made in compliance with the regulations.
- Make sure that there is a switch installed to switch on or off the power.
- The electrical terminal compartments must be closed with the covers.
- Check that the electrical operating specifications of the power supply are correct.
- Make sure that there are no openings in the housing. Any unused cable gland must be replaced by a Ex certified blind plug. In addtion, make sure that each cable is tightly connected in its cable gland.

- Switch on the power.

The flowmeter measures the gross actual volume of the liquid. If necessary, the measured volume can be corrected for temperature and pressure with a flow computer. In the illustration below a typical set-up is shown with a flow computer and a pressure and temperature transmitter. The flow computer has to be set-up in accordance with local regulations.

CAUTION!
The actual gross volume is already compensated for body expansion by temperature. optional is also correction for body expansion by pressure. If however the body expansion correction is externally applied, the internal correction must be disabled.

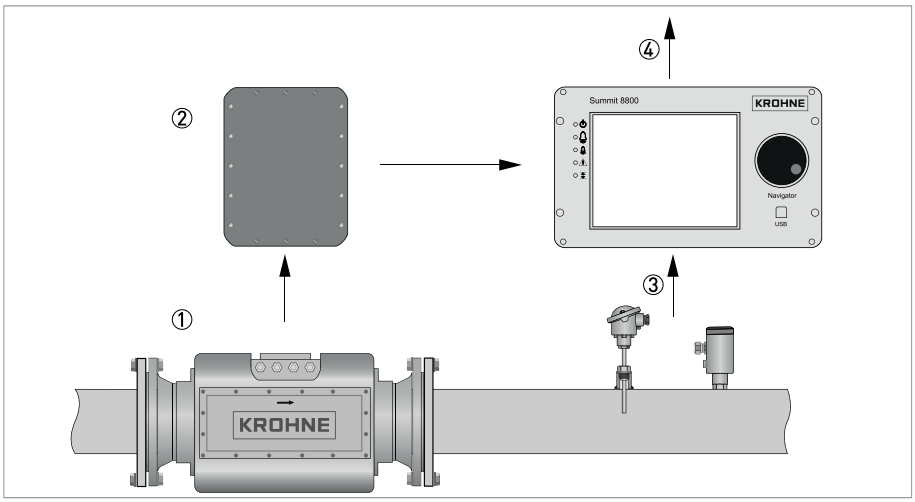

Figure 6-1: Correction of flow volume with P&T transmitters and flow computer

① Flow sensor
② Signal converter
③ Liquid temperature and pressure transmitter
④ Summit 8800 flow computer

INFORMATION!
Optionally, the density can be measured as well.

7.1 Introduction

The KROHNE Flowmeter Configuration and Monitoring Tool is a software package to support the application of the ALTOSONIC 5 flowmeters. It is designed to be used with a PC with a Windows operating system and can be downloaded from www.krohne.com.
It can:

- collect data from a flowmeter
- present data from a flowmeter
- verify / set / adjust parameters used by the software inside the flowmeter.

The software can be operated using different communication methods such as:

- TCP/IP
- Modbus
- USB

7.2 Installation of the software

After the software has been installed, the Windows Program menu will have an item KROHNE Custody Transfer Products with sub item KROHNE Flow Meter Configuration & Monitoring Tool.

7.3 Starting a session

CAUTION!
To secure reliable operation of the flowmeter, access is limited by means of passwords. Different passwords are available for different user roles.

INFORMATION!
A session is the activity starting with establishing communication (connecting) with a flowmeter. A session ends when the communication process with a flowmeter is terminated (disconnecting). During a session data can be collected from a flowmeter in order to monitor and evaluate the performance, the collected data may be stored as a log file and parameters can be adjusted.

After the program is launched a blank screen will appear with only a number of menu pull down buttons on the menu bar on the upper left side of the computer screen.

Figure 7-1: Start-up screen, upper part

The lower left corner of the screen shows a status bar with some information fields and status fields or status indicators.

Figure 7-2: Start-up screen, lower part

The first field is an information field, reserved to show the communication method in operation. Without an active communication the first and the second fields will show a dash.

When communication with a flowmeter has been established, the second field will show the address of this flowmeter, valid for the communication method in operation.

Figure 7-3: Connect the device

1. Choose and click the menu pull down button Device.
   A menu will open with the options Connect, Reconnect and Disconnect.
2. Click Connect (at this time the only valid option).
   This will open a dialog box asking to select or confirm the communication method you intend to use.

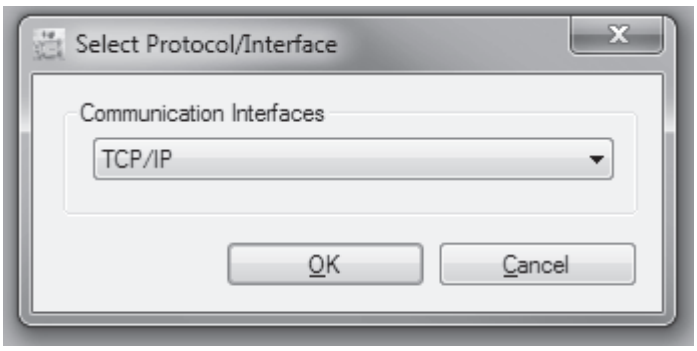

Figure 7-4: Communication interfaces

1. Click OK to confirm if you want to select the option as displayed or - if not -
2. Click the down button to have the other options displayed.
3. Select and click the option you need.
4. Click OK to confirm.

KROHNE Flowmeter Configuration and Monitoring Tool will now send a message, asking for a response from any flowmeter that is able to communicate using the selected communication method.

When using TCP/IP (network environment) a dialog box will appear listing the responding flowmeters. If multiple instruments are present in the same network a list will be presented. The other communication option are peer-to-peer and will request for setting up the communication link.

An arrow in the most left column in the dialog box marks the meter selected to start a communication session.

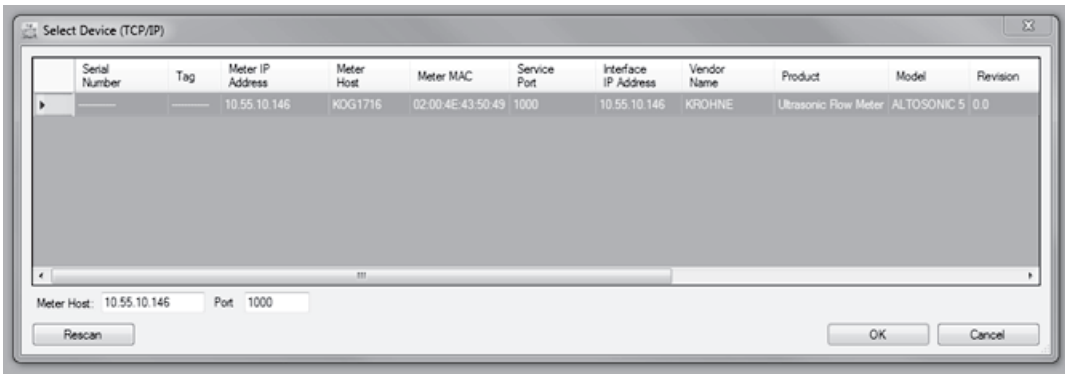

Figure 7-5: Select the device

1. To confirm the selection, click on the arrow in the most left field of the row with the meter selected by default.
2. To select another meter: move the arrow to the row with the flowmeter you want to communicatie with, click in the most left field of the row showing the meter.
3. Confirm the choice by clicking OK.

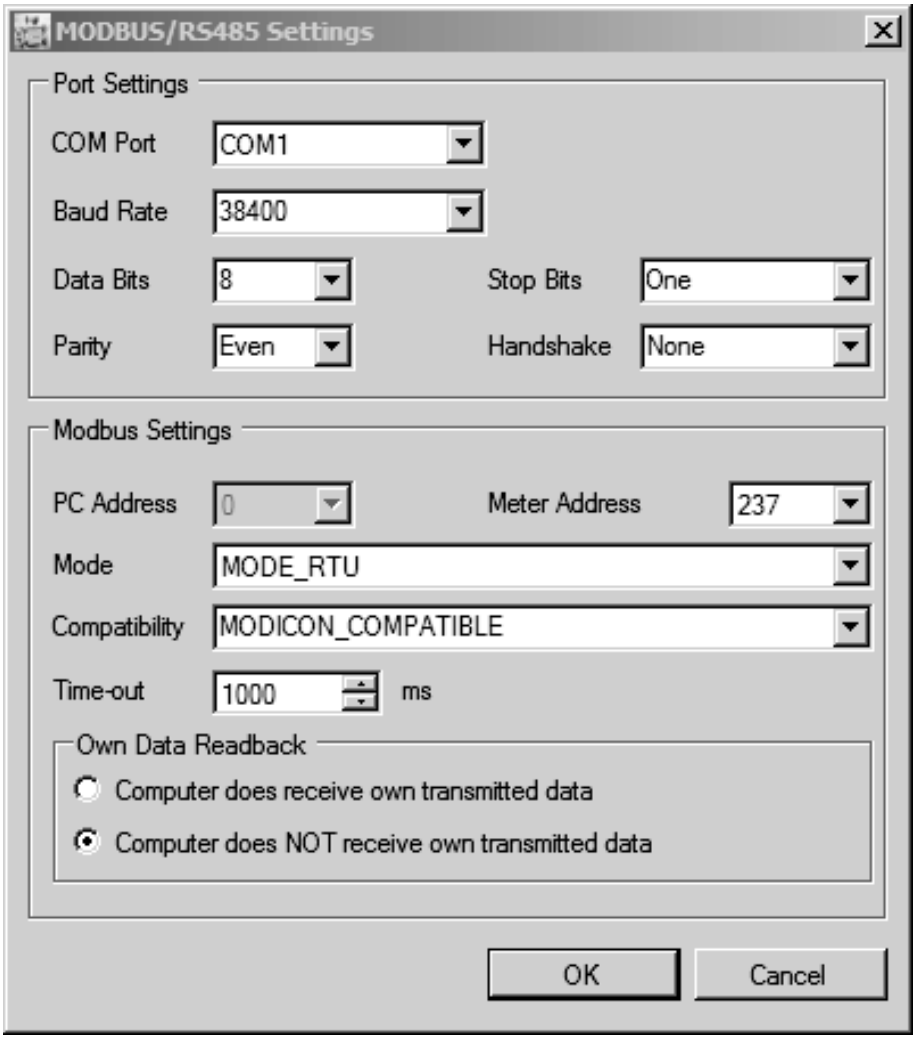

Figure 7-6: Settings for Modbus port 0

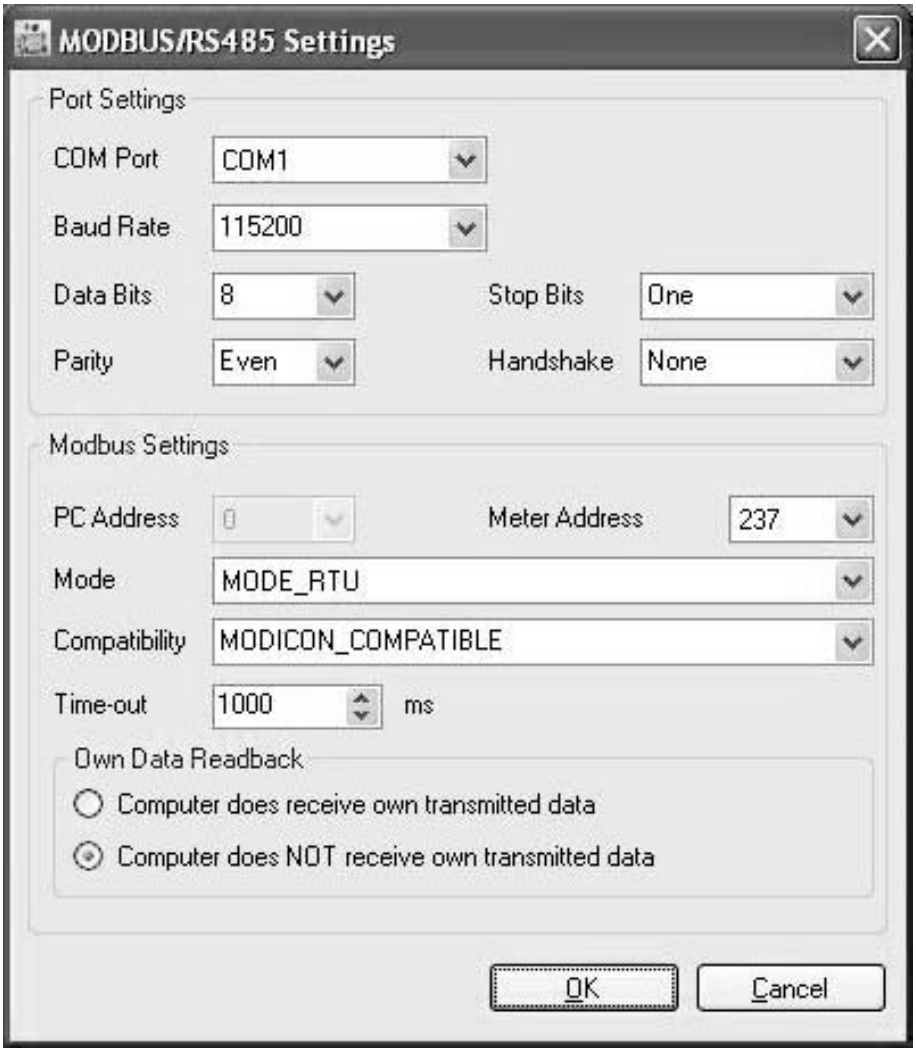

Figure 7-7: Settings for Modbus port1

If you do not get a response from any meter or you don't get a response from the flowmeter you want to communicate with, then the reasons can be:

- there is no flowmeter operational, or
- the flowmeter you want to communicate with is not connected to a power source, or
- the communication line is not properly connected.

If this happens you can press the button "Rescan" after the problem is solved. MCST will now resend the message, asking for a response from any meter that is able to communicate using the selected communication method. If the problem has been solved properly, the meter that you are looking for will be listed in the dialog box.
You have now selected a communication method and a meter. The selected communication method and flowmeter address will now appear in the respective information fields in the status bar at the bottom of the screen.

Figure 7-8: Selection at the bottom of the screen

Type your name and password in the dialog box and click OK.

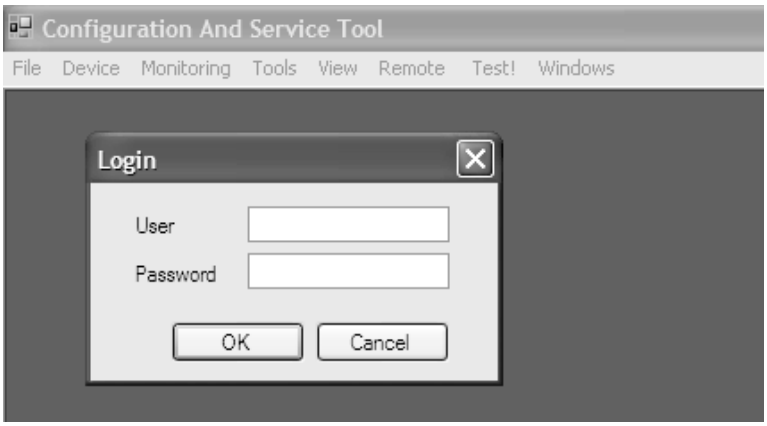

Figure 7-9: Login dialog box

Standard: User: operator / Password: operator
or User: supervisor / Password: supervisor

The selected communication method and flowmeter address will appear in the respective information fields in the status bar at the bottom of the screen.

Figure 7-10: Status bar information

7.4 Loading a monitoring configuration

INFORMATION!
There are two different methods to obtain data from a flowmeter.

- *Request information on a specific data item: if it is a parameter the current value will be reported, this is a static value. If it is a variable, the value will be reported and updated every 2 seconds.*
- *Define a selection of data that the flowmeter will send as a package and update at specific rate. This way the data collecting process is customized to collect only those variables or data elements that one really needs or wants to be monitored and / or logged (as the meter produces a large amount of data it will not be possible to collect and update all the variables in a short time interval).*

The option "Configure" is available to customize the selection of data to be sent from the flowmeter at a specific update rate. This option is used to define the set of data that will be collected from the flowmeter: this set of data will be available to be displayed simultaneously. The specification of such a set of data is stored in a monitoring configuration file, a file with an extension " .mon " . A default monitoring configuration file can be found in the software installation package. Once a monitoring configuration is loaded, the monitoring process can be started and stopped.

To load a monitoring configuration:

Step 1: Click the button "File" to open the File menu.

Step 2: Select the option "Open Monitoring Configuration".

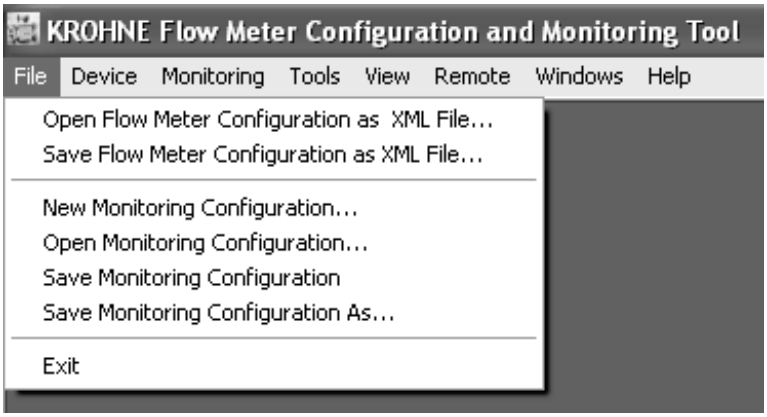

Figure 7-11: File menu

A browser window will open.

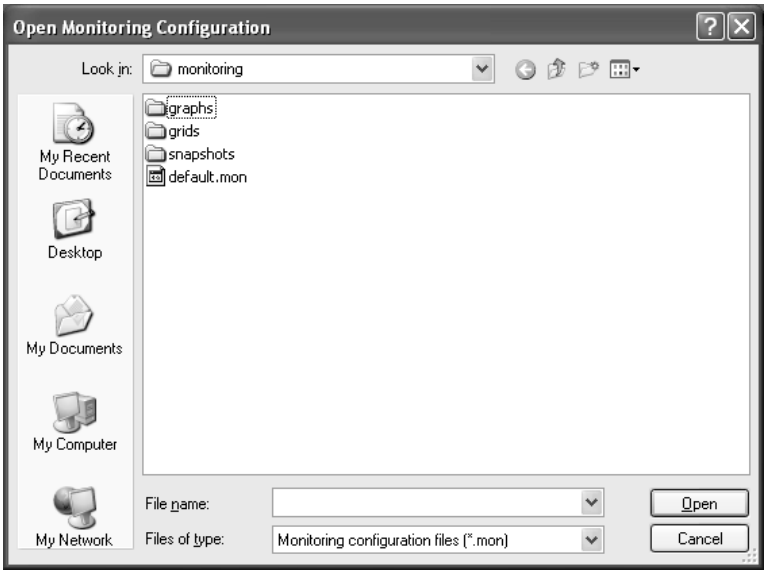

Figure 7-12: Open monitoring configuration

Step 3: Select a monitoring configuration file and click “Open”.

INFORMATION!
You can create and save one or more monitoring configurations of your own, according to your own preferences. Later it will be explained how you can do this.

As a start you can select the default monitoring configuration file.
A dialog box will appear, asking whether you want to start the monitoring function now:

Step 4: Click “Yes” to start the monitoring function.

The monitoring status field updates from “Mon.OFF” to “Mon.ON”, and turns from yellow into green.

Figure 7-13: Green status field

Alternatively you can configure the software to automatically find a monitoring configuration file and start monitoring immediately after the program is launched.

Step 5: Click the “Tools” button to open the tools menu.

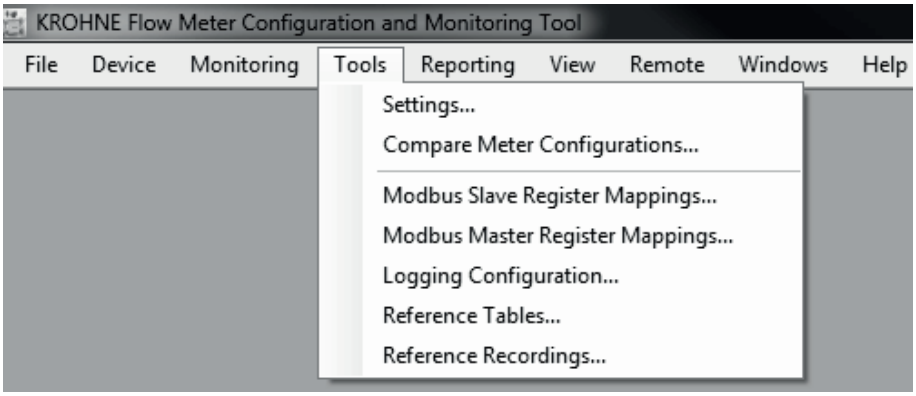

Figure 7-14: Tools menu

Step 6: Click “Settings”. A window “Settings” with 5 tabbed sheets will open.

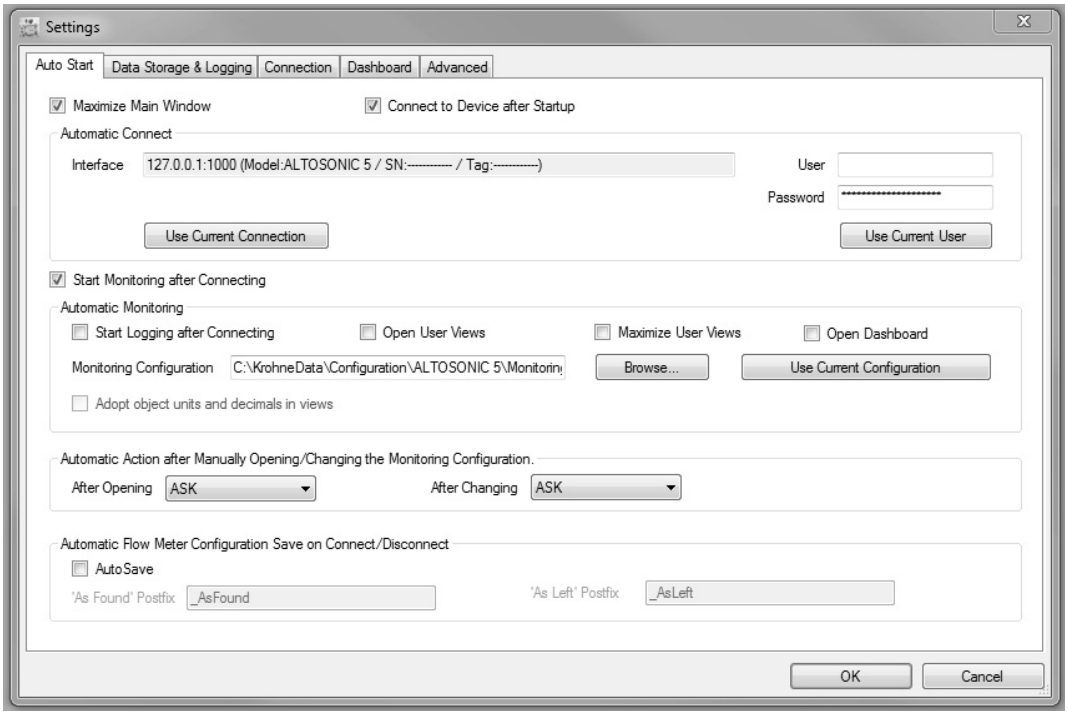

Figure 7-15: Settings

Step 7: On the sheet ”Auto start” select the box “Start monitoring after connecting”.

Step 8: You can:

- click the button “Use current configuration”, or
- click “Browse” to open another window This is an identical browse window as used before to find a monitoring configuration file.
  Select the file you want to use to start monitoring the next time you connect to a meter.

Step 9: Click “OK” to confirm the settings.

The next time you launch the program the steps 1...4 will be skipped.

7.5 Changing and saving a monitoring configuration

7.5.1 Creating a monitoring configuration

When opening the KROHNE Flowmeter Configuration and Monitoring Tool the default settings are such that a default monitoring file is loaded and that a default user view is activated. Also the KROHNE Flowmeter Configuration and Monitoring Tool will start logging directly. All these features will be discussed in the next paragraphs. If due to unforeseen reasons the default start up settings does not start up in the paragraphs below the different steps are discussed to activate monitoring, user view and logging.

In order to modify the selection of data available for monitoring, change the monitoring configuration.

Step 1: Click the button “Monitoring” to open the monitoring menu.

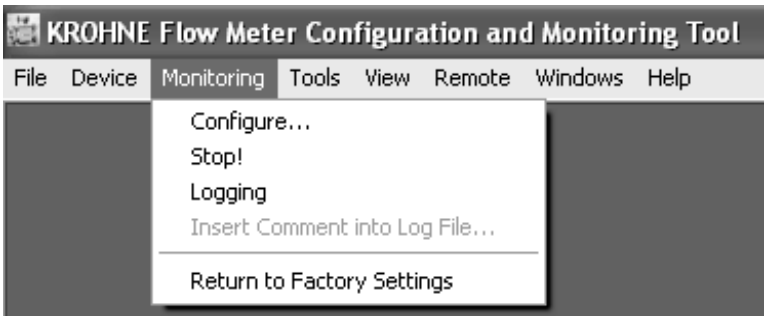

Figure 7-16: Monitoring menu

Step 2: Click the option “Configure...”.

In case a monitoring session is active the message box as below will appear.

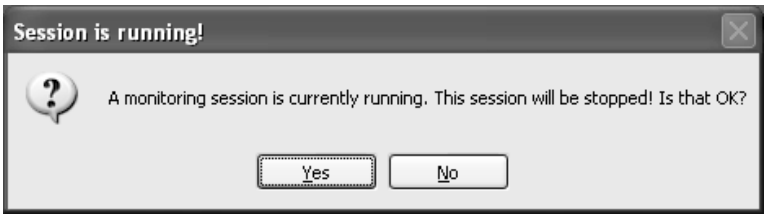

Figure 7-17: Warning for running session

Step 3: Click “Yes” to stop the monitoring activity.

INFORMATION!
Note that the instrument itself will not stop measuring! Only the presentation of measuring results will be interrupted.

The Monitoring Configuration dialog appears:

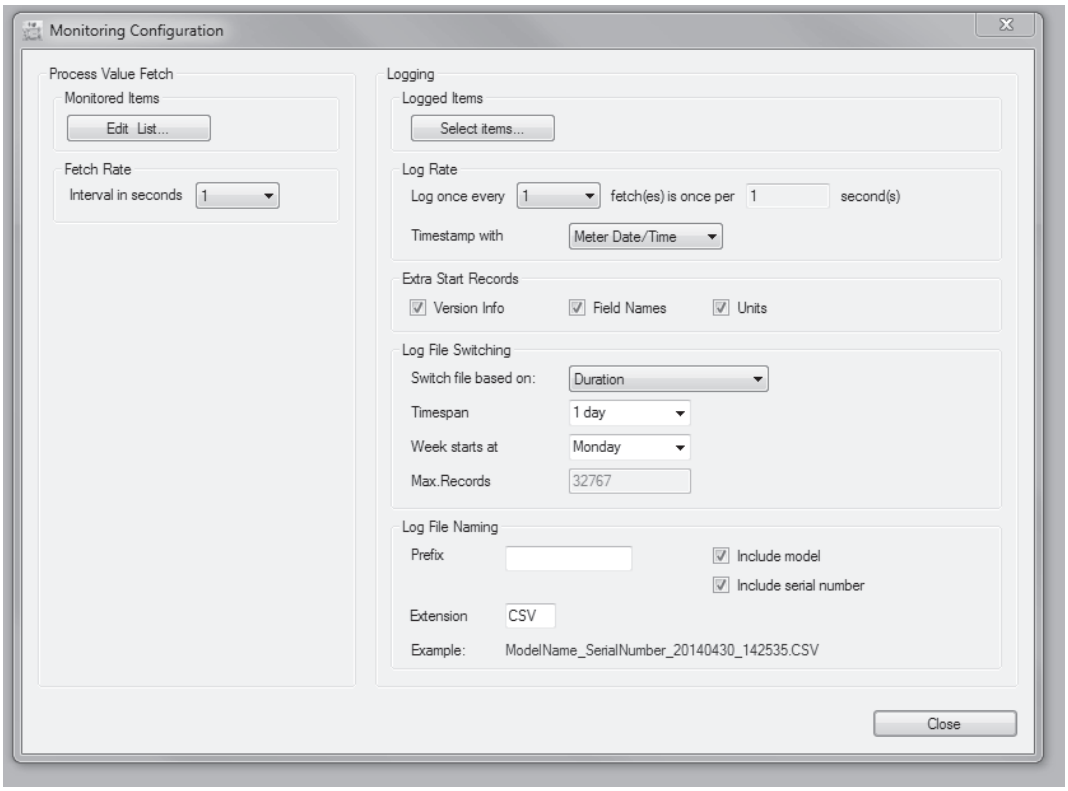

Figure 7-18: Monitoring configuration

Step 4: Click “Edit List” . The Monitoring List editor dialog appears:

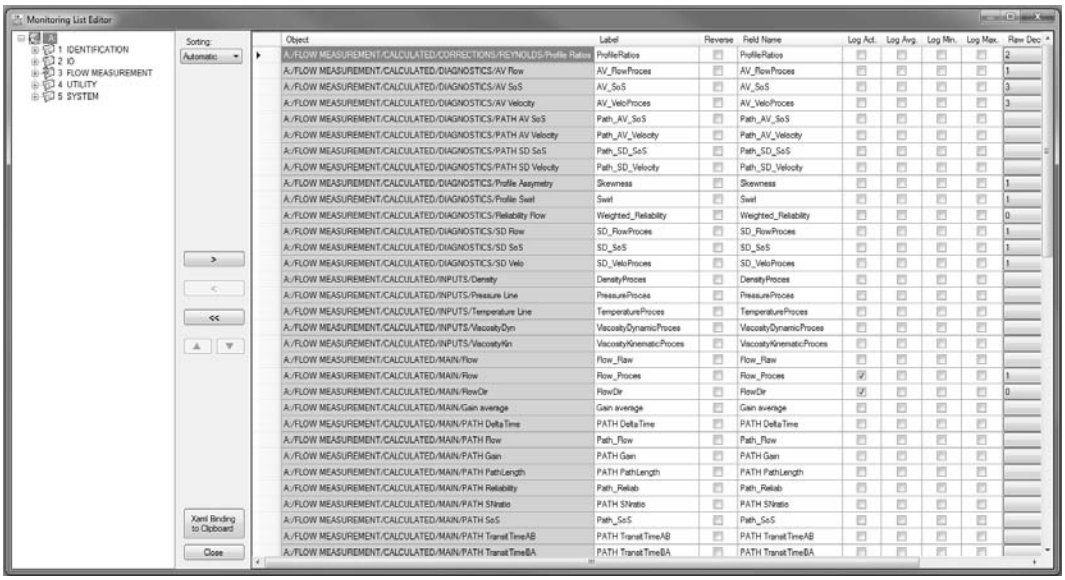

Figure 7-19: Monitoring list

Variables can be added to the list of values to be collected from the meter and become available for presentation:

Step 5: Open the tree structure in the left panel, and select the variable name to be added to the list.

Step 6: Click the button pointing to the right in the center panel. The item will now appear in the list in the right panel.

Similarly variables can be deleted from the list of values to be collected from the meter, these values will no longer be available for monitoring / logging.

Step 7: In the right panel, click in the box to the left of the name/description of the variable to be deleted, the pointer will not move to this line. This will also enable the button in the center panel with the arrow pointing to the left.

Step 8: Click on this button to remove the selected item from the list.

Step 9: Click the button in the centre panel with the double arrow to the left to clear the list completely.

Step 10: Click the button “Close” in the centre panel to finish this part: Monitoring List editor screen will disappear, Returning to the “Monitoring Configuration Window”.

You can adjust the rate at which the selected data will be sent and updated:

Step 11: Click the “down”- arrow left of “Interval in sec.”

Step 12: Click on the rate according to your preference.

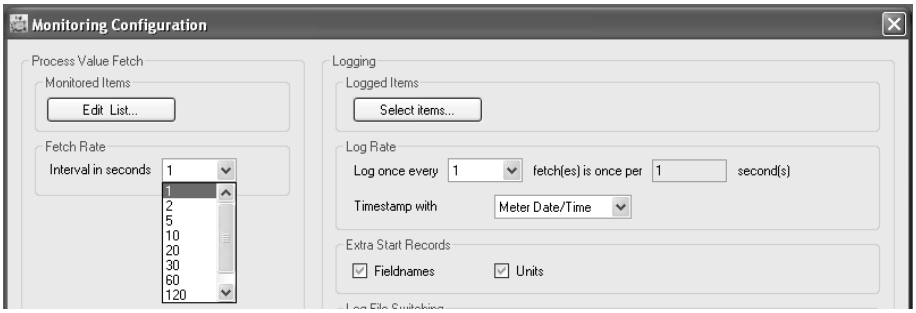

Figure 7-20: Monitoring configuration

Step 13: Click the “Close” button in the lower right corner of this window to finish this part. A dialog box will ask if you want to (re)start the monitoring process.

Figure 7-21: Restart of monitoring

Step 14: Click “Yes” to resume the monitoring process.

7.5.2 Saving a monitoring configuration with a new name

INFORMATION!

- *If you want to save both the modified monitoring configuration as well as the monitoring configuration you used as a starting point, you will need to save now the modified configuration (with a new unique name).*
- *If you do not save the modified configuration now, the program will prompt you at the time you close the program, however at that time you have only two options: you can save the configuration used as a starting point (loosing your modifications) or you can save the modified configuration, this will overwrite the starting configuration (and the starting configuration will be lost).*

Step 1: Click the button "File" to open the file menu.

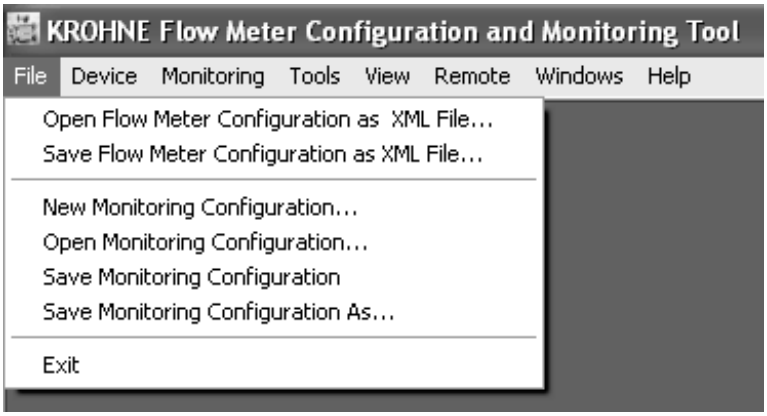

Figure 7-22: File menu

Step 2: Click the menu item “Save Monitoring Configuration As..”.

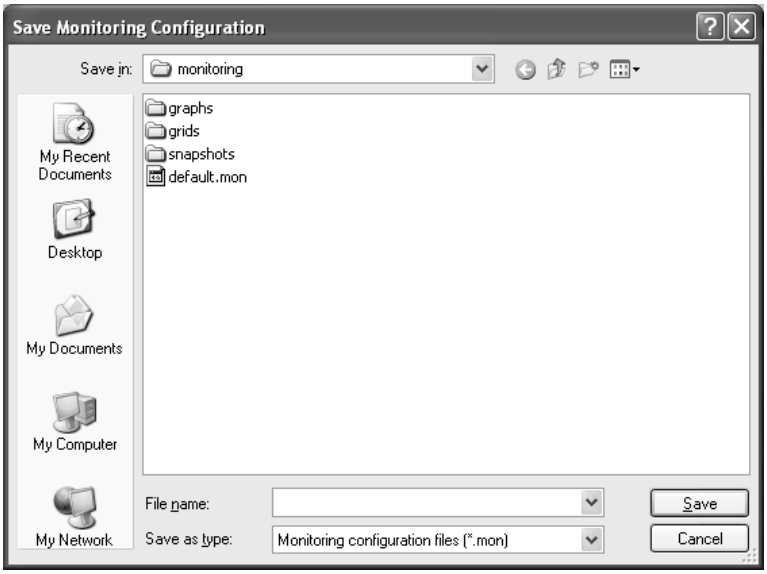

Figure 7-23: Save monitoring configuration

Step 3: Type a new name in the box “Filename”.

Step 4: Click "Save".

Your new monitoring configuration is now saved with its new name.

7.5.3 Saving a monitoring configuration with its current name

You can save an updated version of your monitoring configuration at any time:

Step 1: Click the "File" button to open the file menu.

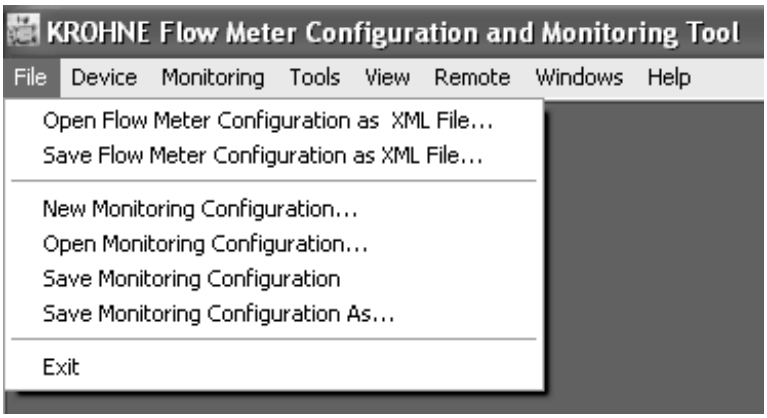

Figure 7-24: File menu

Step 2: Click “Save Monitoring Configuration”.

The monitoring configuration file used as starting point will now be replaced by the modified monitoring configuration.

7.6 Creating a monitoring configuration

CAUTION!
If you have no monitoring configuration file available to start with, or when you have not yet opened a monitoring configuration file, the option "Configure..." in the "Monitoring" menu is not available.

You have to use the option "New Monitoring Configuration..." in the File menu to create a monitoring configuration file.

Step 1: Click the "File" menu button.

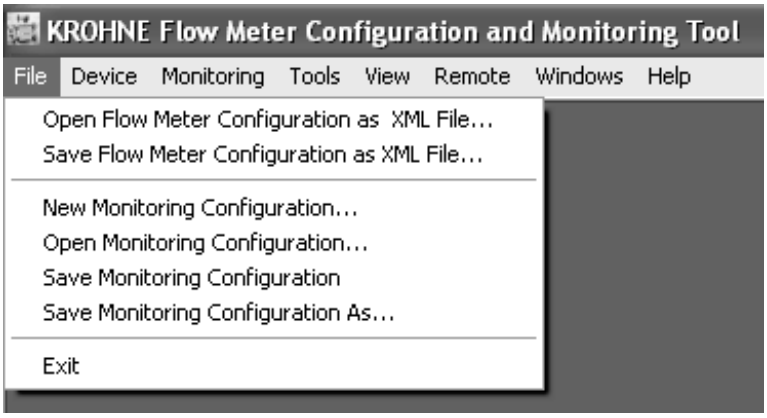

Figure 7-25: File menu

Step 2: Click the option "New Monitoring Configuration...".

You can use this even if you already have a monitoring configuration opened and running. In that case you are asked to stop the running monitoring session.

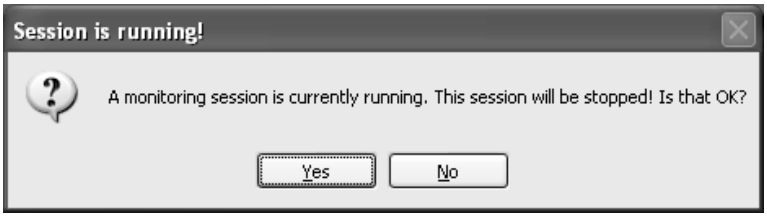

Figure 7-26: Warning for running session

Click "Yes".

Now the Monitoring Configuration screen appears:

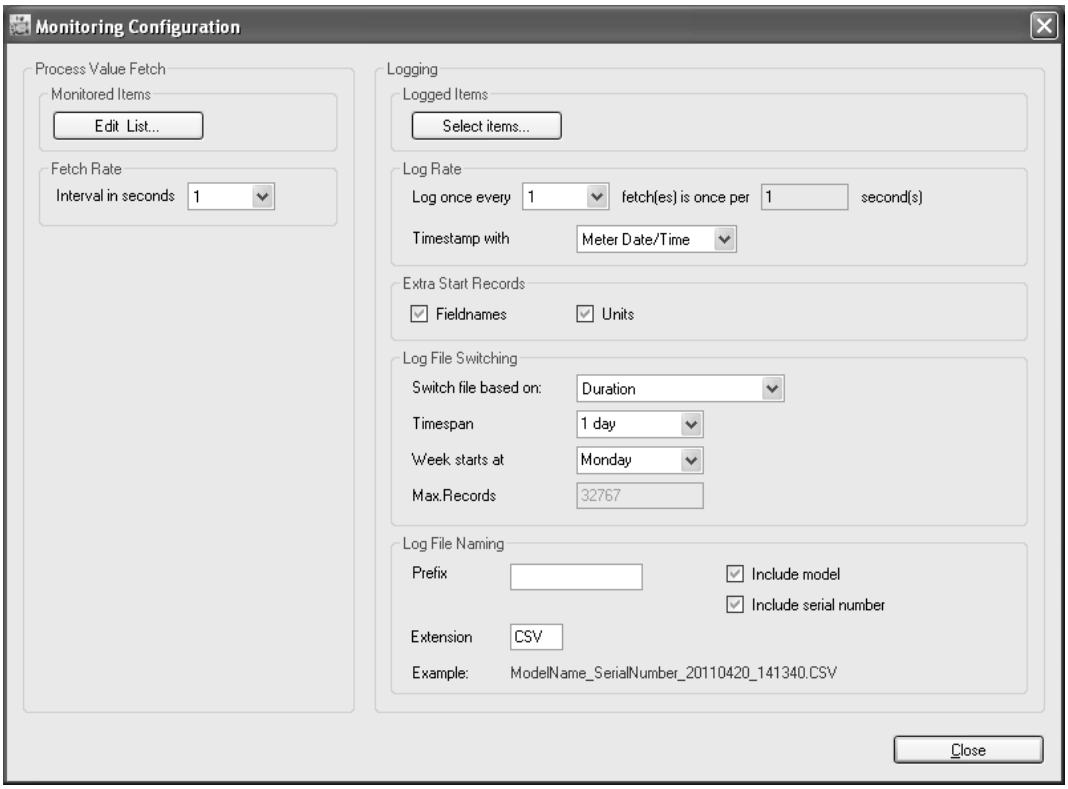

Figure 7-27: Monitoring configuration

Step 3: Click “Edit List”.

The empty Monitoring List Editor window will appear.

Step 4: Open the tree in the panel to the left of the window, select the data items you want to monitor and add these to the list in the panel to the right of the window, by pressing the ">" button.

Step 5: When finished, click “Close” in the “Monitoring List Editor” window.

Step 6: Set or adjust the “Fetch Rate” to the value as required.

Step 7: Click “Close” in the “Monitoring Configuration” window.

The “Monitoring” window reappears:

Figure 7-28: Start monitoring?

Step 8: Click “Yes” to start the monitoring process.

Store the new monitoring configuration using the “Save…” option in the File menu as described before. Assign a name to the new monitoring configuration: the “Save Monitoring Configuration” screen will appear.

If you create a new monitoring configuration while an existing monitoring configuration is open: at the time you exit the program, you are asked to replace the starting configuration, or you may decide not (if you want to keep both you have to use the “Save as…” option before you exit the program).

7.7 Viewing data

The easiest way to view data is to open a predefined User Views menu.

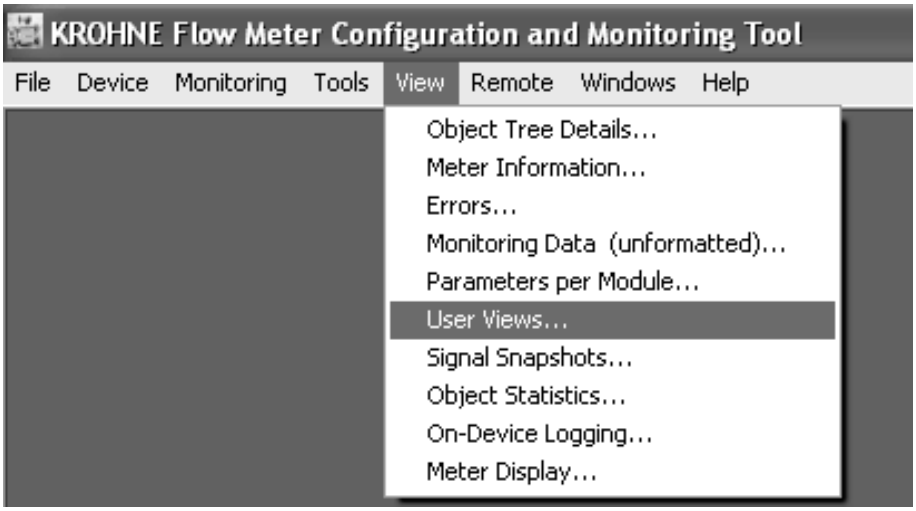

Figure 7-29: View menu

1. Click the button View on the menu bar to open the View menu.
2. Click the option User Views to open the User Views window.

   This window may contain multiple sheets or tabs. Each tab represents a sheet displaying a selection of data, in numerical or graphical format (or both).

More sheets may be present allowing to present different sets of data or to present data in different formats. A particular sheet is identified by means of its name as is shown on its Tab.

3. In the window User Views, any sheet may be selected by clicking on its associated Tab.
4. Other windows may be selected to be viewed using the View menu.

7.7.1 Unformatted data

Step 1: Click the button “View” on the menu bar to open the “View menu”.

Step 2: Click “Monitoring Data (unformatted)...”.

An information window as below will appear as a scroll list.

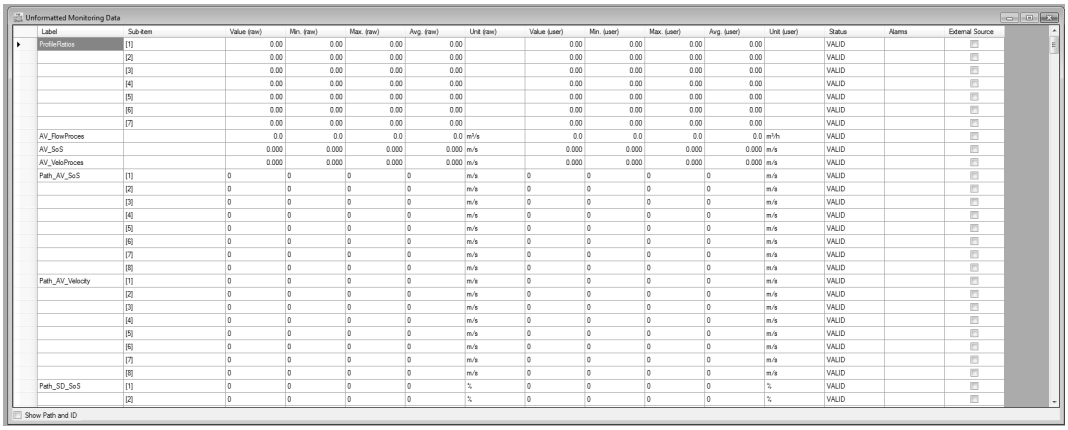

Unformatted Monitoring Data

Label	Sub-item	Value (raw)	Min. (raw)	Max. (raw)	Avg. (raw)	Unit (raw)	Value (user)	Min. (user)	Max. (user)	Avg. (user)	Unit (user)	Status	Alarms	External Source
ProfileRatios	[1]	0.00	0.00	0.00	0.00		0.00	0.00	0.00	0.00		VALID		
	[2]	0.00	0.00	0.00	0.00		0.00	0.00	0.00	0.00		VALID		
	[3]	0.00	0.00	0.00	0.00		0.00	0.00	0.00	0.00		VALID		
	[4]	0.00	0.00	0.00	0.00		0.00	0.00	0.00	0.00		VALID		
	[5]	0.00	0.00	0.00	0.00		0.00	0.00	0.00	0.00		VALID		
	[6]	0.00	0.00	0.00	0.00		0.00	0.00	0.00	0.00		VALID		
	[7]	0.00	0.00	0.00	0.00		0.00	0.00	0.00	0.00		VALID		
AV_FlowProces		0.0	0.0	0.0	0.0	m³/s	0.0	0.0	0.0	0.0	m³/h	VALID		
AV_SoS		0.000	0.000	0.000	0.000	m/s	0.000	0.000	0.000	0.000	m/s	VALID		
AV_VeloProces		0.000	0.000	0.000	0.000	m/s	0.000	0.000	0.000	0.000	m/s	VALID		
Path_AV_SoS	[1]	0	0	0	0	m/s	0	0	0	0	m/s	VALID		
	[2]	0	0	0	0	m/s	0	0	0	0	m/s	VALID		
	[3]	0	0	0	0	m/s	0	0	0	0	m/s	VALID		
	[4]	0	0	0	0	m/s	0	0	0	0	m/s	VALID		
	[5]	0	0	0	0	m/s	0	0	0	0	m/s	VALID		
	[6]	0	0	0	0	m/s	0	0	0	0	m/s	VALID		
	[7]	0	0	0	0	m/s	0	0	0	0	m/s	VALID		
	[8]	0	0	0	0	m/s	0	0	0	0	m/s	VALID		
Path_AV_Velocity	[1]	0	0	0	0	m/s	0	0	0	0	m/s	VALID		
	[2]	0	0	0	0	m/s	0	0	0	0	m/s	VALID		
	[3]	0	0	0	0	m/s	0	0	0	0	m/s	VALID		
	[4]	0	0	0	0	m/s	0	0	0	0	m/s	VALID		
	[5]	0	0	0	0	m/s	0	0	0	0	m/s	VALID		
	[6]	0	0	0	0	m/s	0	0	0	0	m/s	VALID		
	[7]	0	0	0	0	m/s	0	0	0	0	m/s	VALID		
	[8]	0	0	0	0	m/s	0	0	0	0	m/s	VALID		
Path_SD_SoS	[1]	0	0	0	0	%	0	0	0	0	%	VALID		
	[2]	0	0	0	0	%	0	0	0	0	%	VALID		

Show Path and ID

Figure 7-30: Unformatted data

The shown data is the data as currently being collected from the meter: only the values of the variables as defined in the monitoring configuration file.

7.8 Customizing the way data is presented

The data presented in “User Views” can be configured according to your specific needs or preferences. This applies to the selection of the data and to the way the data is presented: in numerical format or as a graph.

INFORMATION!
Only data that is actually gathered from the flowmeter (as set up in the Monitoring Configuration), is available to be displayed. A data item not included in the “Fetch list” will not be available to be displayed. You have to use the option “Configure” in the “Monitoring” menu to add to the “Fetch list” any data item you want to see in order to make it available for presentation.

7.8.1 Setting up tabs in the user view window

The window “User Views” has two buttons in its lower right corner: “Add Tab” and “Remove Tab”.

Removing a tab

Use the button “Remove Tab” to remove an existing sheet in the window “User Views”. In case the “User Views” window has multiple sheets, the currently opened sheet will be deleted.

INFORMATION!
in case you made a change, you will be reminded that you changed the monitoring configuration file when you close MCST. If you accept the modified configuration file to be saved, you will not be able to recover the deleted sheet the next time you start MCST.

If you want to keep both the set up you started with and the modified version, save the new version with a new name before closing the program. Use the command “Save Monitoring Configuration As..” (in File Menu) . This command stores the set up of the information sheets contained in “User Views” as well.

Adding / creating a tab

Using the button “Add Tab” you can add a new (empty) sheet in the window “User Views” and create a sheet to your own preferences.

A sheet can be set up as one single panel, or split in two sections, arranged as an upper panel and a lower panel. Each panel can be used to display data either as a graph or as numerical values displayed in cells arranged in a grid.

INFORMATION!
The format of the way data is presented in a panel is stored in a file with an extension “.grdx” (for presenting data as numerical values), “.trdx” (for presenting data as a graph, showing values as a trend on a time axis) or “.xygx” (for presenting data as a graph of one variable as a function of another variable).

The name of the file defining the format of the presentation in a specific panel can be read in its upper left corner.

CAUTION!
The files used for the preset "User Views" tabs can be reused. This is the easiest way to create your own "sheets" or "tabs" : making combinations of the predefined grids and/or graphs according to your preference.
In case you use an existing – predefined- format (even if it appeared before as a format filling only a half sized upper or lower panel) to fill a sheet or tab with only one panel, it will automatically expand to fill the whole of the panel.

To add/create a new tab:

Step 1: Click the "Add Tab" button.

Step 2: The "Add Tab" dialogue appears prompting you to enter a name for the sheet and to define the data format (graph or numerical) to be used in the upper panel and the lower panel (in case only one panel is defined the sheet will have just one panel).

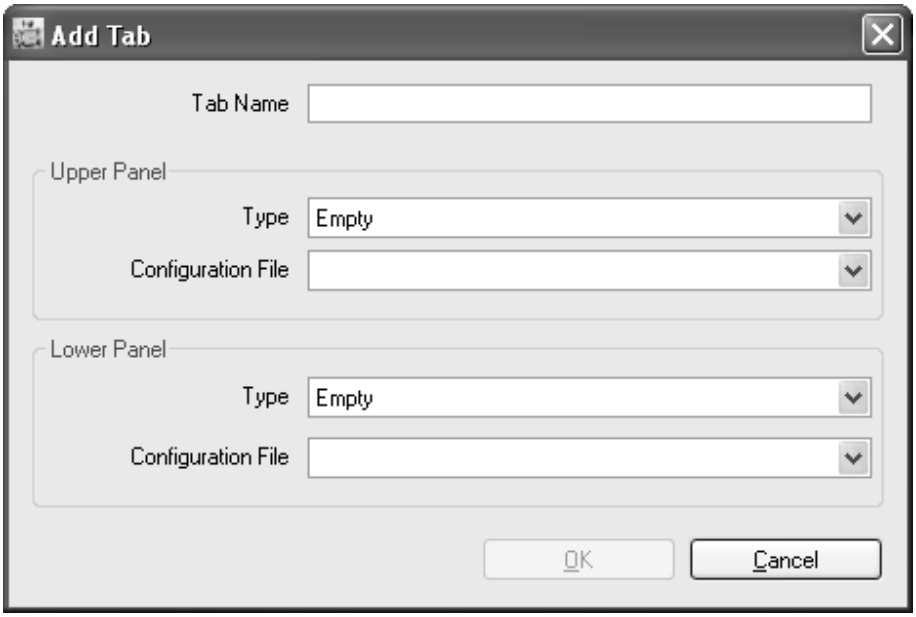

Figure 7-31: Add tab

Step 3: Type a name for the new sheet in the box "Tab Name".

Step 4: Open the selection list for the type of panel you want to use: click the down arrow to the right of the box "Type" in the section "Upper Panel".

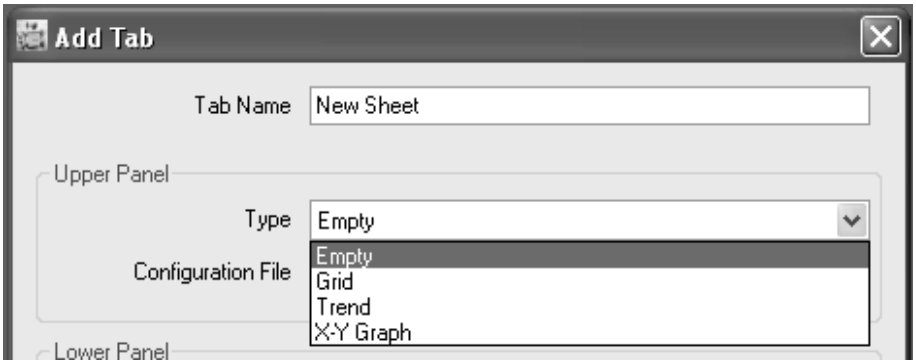

Figure 7-32: Add tab

Step 5: Click “Grid”, “Trend” or “X-Y Graph” according to your choice and then click “OK”.

Step 6: Click the “down” arrow to the right of the box configuration file.

Step 7: A list of available presentation formats will become visible. Click the file of your choice.

Step 8: If desired, select a format and a definition file for the second panel.

Step 9: Click the “OK” button.
Now the new sheet will appear with one or two panels as you have chosen.

INFORMATION!
As you have added a new tab, you will be reminded you have changed the monitoring configuration file when MCST is closed (shut down). If you accept the modified configuration file to be saved, you will not be able to recover the monitoring configuration you started with.
If you want to keep both the set up you started with and the modified version, you have to save the new version with a new name before closing the program. Use the command “Save Monitoring Configuration As..” (in the File Menu) . This command stores the set up of the information sheets contained in “User Views” as well.

7.8.2 Creating a new grid definition

In order to define a “grid” for presentation of data in numerical format according to your own preferences:

Step 1: Click “Add Tab”.

Step 2: Type a name for the new tab.

Step 3: Select “Grid”.
Note: Leave the “Configuration File” field empty.

Step 4: Click “OK”.
A new tab defined as a grid will appear initially as a grey area.

Step 5: In order to have a visible grid displayed, the size of the grid (number of cells) has to be defined. With a right mouse click a menu will open, click the option “Add Column(s)”:

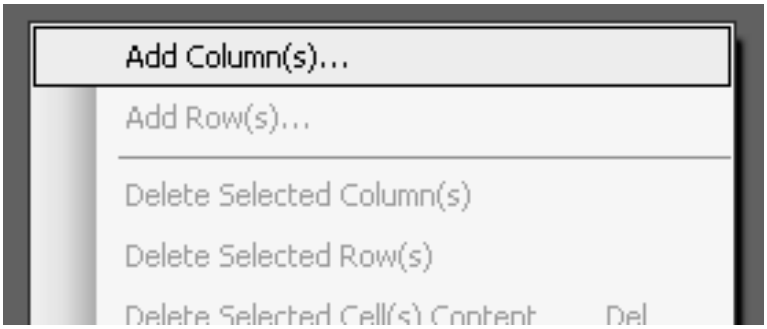

Figure 7-33: Add columns

Step 6: Enter the number of columns in the dialogue box that appears and click OK.

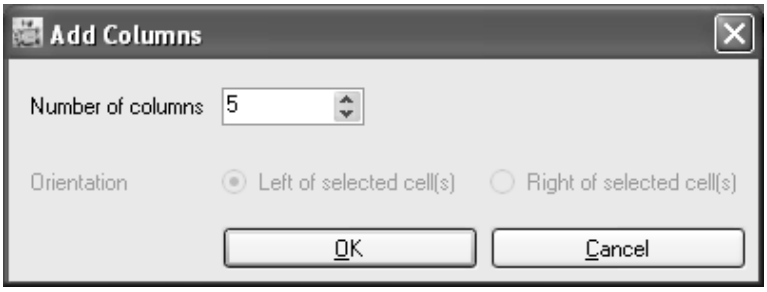

Figure 7-34: Add columns

Step 7: Click again in the gray area with the right mouse button to open the context menu, and click the option “Add Row(s)”.

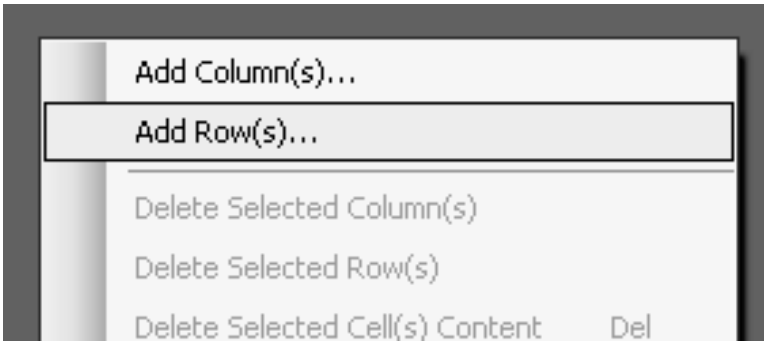

Figure 7-35: Add Rows

Step 8: Type the number of rows in the dialogue box that appears and click OK.

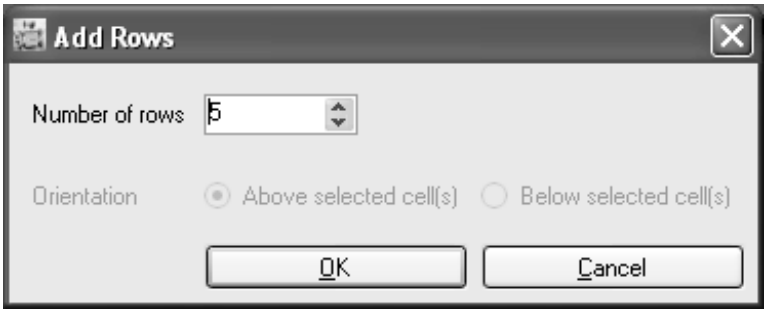

Figure 7-36: Add rows

The size of the grid is now defined, however it can be adjusted at any time adding columns or rows.

To define the information to be displayed by a specific cell:

Step 1: Position the cursor on the cell to be defined.

INFORMATION!
Do not forget the next step! If you skip the cell selection and continue with the following steps you might edit the content or format a cell you don't want to change.

Step 2: Click the desired cell with a click of the left mouse button.

Step 3: Open a menu with a right mouse click.

Step 4: Click "Cell Content…".
In the dialogue box that appears, for the field "Cell Content Type".

Step 5: Click "down" to open the value list to display the options:
"Empty" / "User Text" / "Process Value Property".

INFORMATION!
Steps 6...8 *can be done in two ways. After "Step 13" you find an alternative way.*

Step 6: Click "Process Value Property" .

Step 7: For the field "Process Variable" open the variable list .

Step 8: Click the variable to be displayed.

Step 9: For the field "Subitem" open the variable list.
Subitem is the array index for a variable defined as an array.

Step 10: Click the index of the array element to be displayed.

Step 11: For the box referenced as “Property”, open the list to show the properties that can be selected:
Label / Fieldname / Name / Full path / Parent name / Full parent path / Actual value / Average value / Minimum value / Maximum value / Unit / Status.

Step 12: Click the property to be displayed.

Step 13: Click ”OK”.

Alternative way for steps 6...8:

Step 6: Click “User text”.

Step 7: Type the text "String" to be displayed in the cell in the field “User text”.

Step 8: Click ”OK”.

To adjust the appearance of a cell and its content:

Step 1: Position the cursor on the cell to be defined.

Step 2: Click this cell with a click of the left mouse button.

Step 3: Open a menu with a right mouse click.

Step 4: Click “Cell Properties...”.

Continue to specify the content of any cell as you like.

Right click with your mouse in the area of the panel with the new grid to open the menu.
Click “Save...” or “Save as...” to open a dialog box to enter a name for the grid definition you just created.
Click the “Save” button to finish.

INFORMATION!
As you have added a tab with a new grid definition, you will be reminded you have changed the monitoring configuration file when MCST is being closed (shut down). If you accept the modified configuration file to be saved, you will not be able to recover the monitoring configuration you started with.
If you want to keep both the set up you started with and the modified version, you have to save the new version with a new name before closing the program. Use the command “Save Monitoring Configuration As..” (in File Menu) . This command stores the set up of the information sheets contained in “User Views” as well.

7.8.3 Creating a new graphical presentation

Step 1: Click “Add Tab”.

Step 2: Type a name for the new tab.

Step 3: In the box “Type” click on the option “Trend”.
Note: Leave the “Configuration File” field empty.

Step 4: Click “OK”.
An empty graphic screen appears.

Step 5: Click the button “Configure”.
A window will open for defining the settings of the graphical presentation.

INFORMATION!
It is beyond the scope of this manual to give detailed instructions about how to define the graphical presentation. However you will be able to find your own way using the brief description of the next steps:

Step 1: Set the number of variables you want to be displayed (each variable selected for being displayed is called a “profile”).

Step 2: Set the number of Y-axis’s you will need to represent the values of the variables (profiles) you want to be displayed. This number can not be larger than the number of profiles.

Step 3: Set how many stacks you need. A stack is a chart area with its own X and Y axis’s. The height of area in the graphical window will be spit in sections, each section will accommodate one “Stack”. The number of stacks can not be larger than the number of Y-Axis’.

Step 4: Set the number of Y-scales you will need on the first (upper) stack.

Step 5: Enter this number in the tab Y-Stacks/Y-Stack0.
Do the same for any subsequent “stack”.

Step 6: In the tab “Profile – Process Value Mapping” specify the process value to be represented by each profile.

Step 7: In the tab “Profiles” set the axis to be used for displaying the value of each profile.

Step 8: Adjust colours and line/marker styles according to your taste.

Step 9: Click “OK” .

Step 10: Click “Save As”.
Enter a name for the graphical presentation you just have created.

Step 11: Click “Save”.

7.9 Creating reports

The service tool has been developed to also enable you to create records regarding the state of the ultrasonic flowmeter and the way the meter performs. Records can be printed reports or records can be exported and saved as data files on a storage medium.

Records can be created regarding:

- the actual parameter values as present in the meter, governing the performance and functionality of the meter.
- process values as observed at a specific instant.
- the Modbus address mapping regarding the parameters and process values that can be retrieved from the meter using Modbus register addressing.
- rights and/or restrictions regarding access to the ultrasonic meter and the functionality of this service tool, as is available for a user of a specific category (such as operator, supervisor, calibrator, service technician or factory authorized support engineer).

To obtain a report:

Click “Reporting” to open the Reporting submenu.

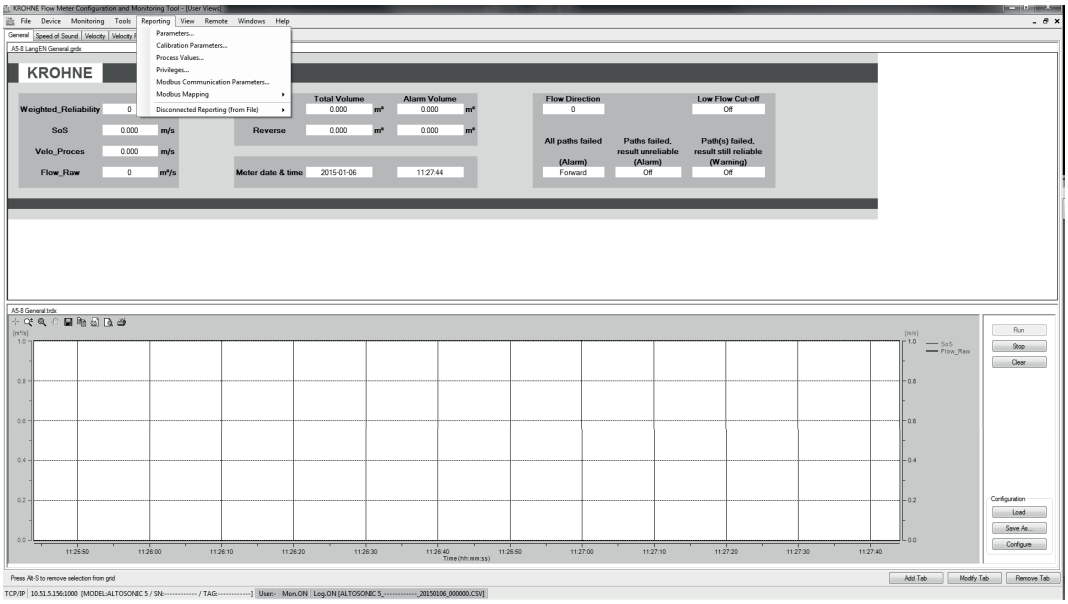

Figure 7-37: Reporting menu

7.9.1 Reporting related to parameter settings

Click “Parameters” to open a window in which all parameters are listed.

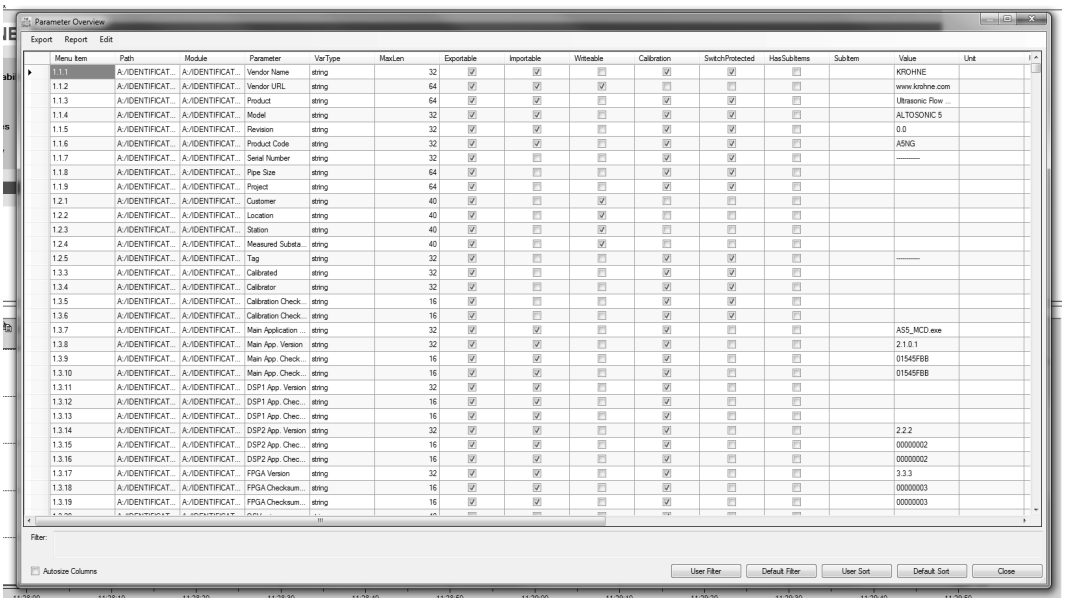

Figure 7-38: Parameters

Use the scroll bar at the right side of the window to scroll through the list and the scroll bar at the bottom to display the columns you are interested in.

Creating a formatted report

Go to "Reports & Exports > Reports > Standard parameter report".

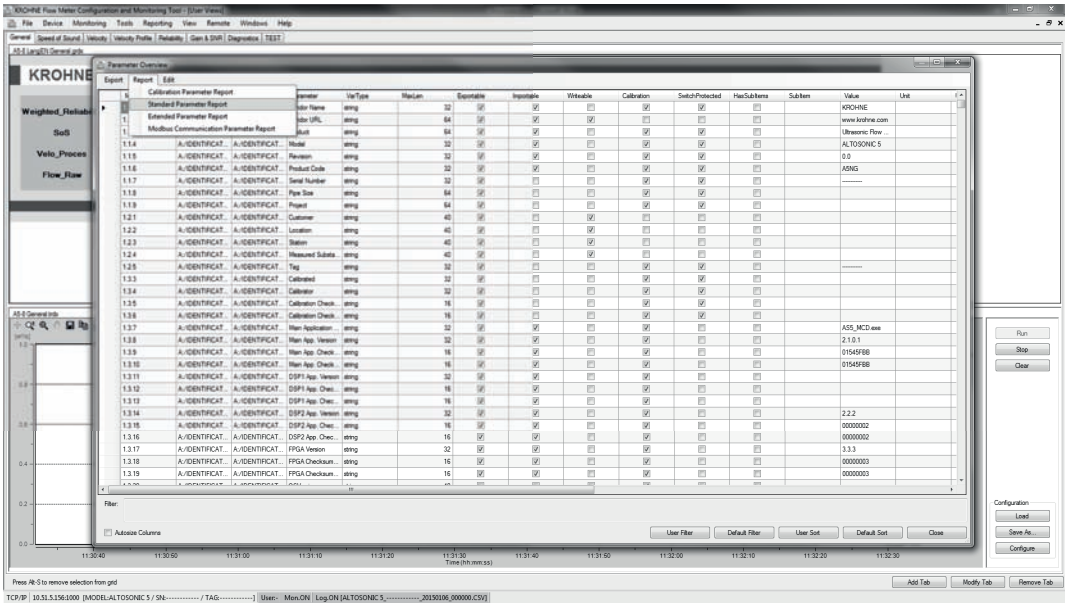

Figure 7-39: Parameter report

A formatted preview of the Standard Parameter Report will be displayed:

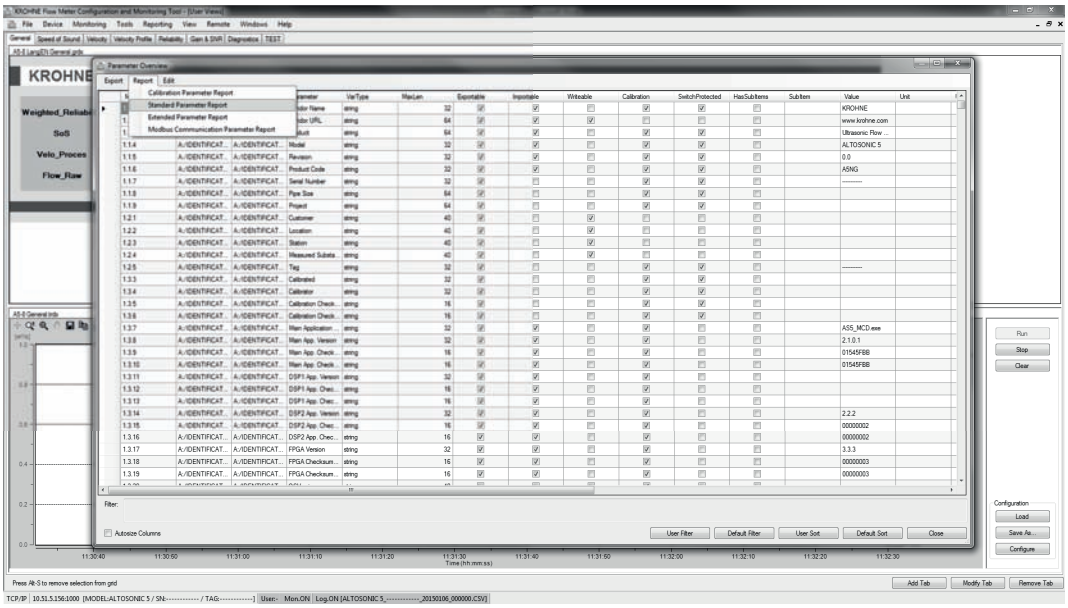

Figure 7-40: Preview of report

As this report will occupy several pages you can use the buttons on top of the screen to select a particular page.

The small panel at the left side lists – as a tree structure - all the items included in the report. You can use the scroll bar in the right of the small panel to position immediately the report page where this parameter is printed in front in the right panel. You can click the highlighted “tree” icon to remove this “tree” panel, click again to let it reappear.

Printing a formatted report

Figure 7-41: Report preview

Click the button with the printer icon in the upper left of the window to get a printed copy of the report.

Exporting a formatted report

Open the Report Preview's Export menu:

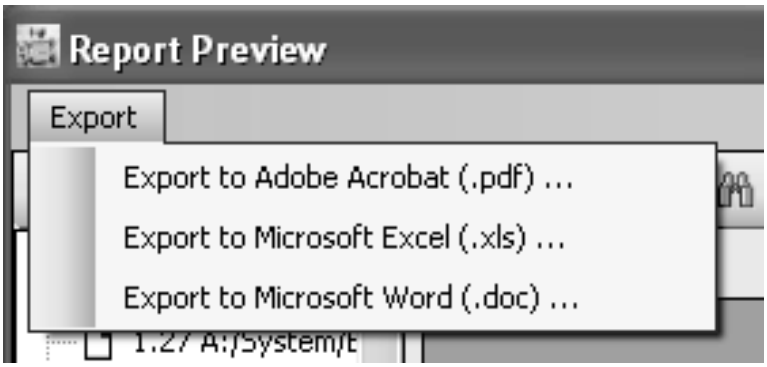

Figure 7-42: Report preview

Select the application format of the exported report: Adobe Acrobat (.pdf), Microsoft Excel (.xls), or Microsoft Word (.doc). use the file selector dialogue to select the location and the filename for the export.

Create a file listing the parameters in CSV format

Click "Reporting" to open the Reporting submenu.

Click "Parameters" to open a window in which all parameters are listed.

Click "Reports and Exports", then "Export to CSV...".

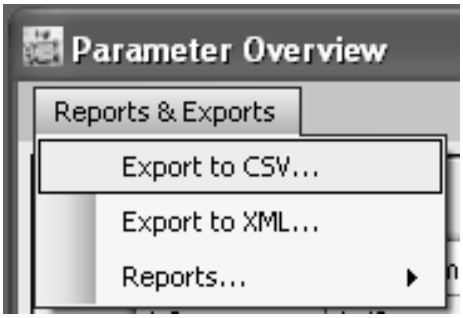

Figure 7-43: Parameter overview

A window opens that allows you to make a selection of the attributes to be listed for each parameter.
Select the items you want to include in the exported file.

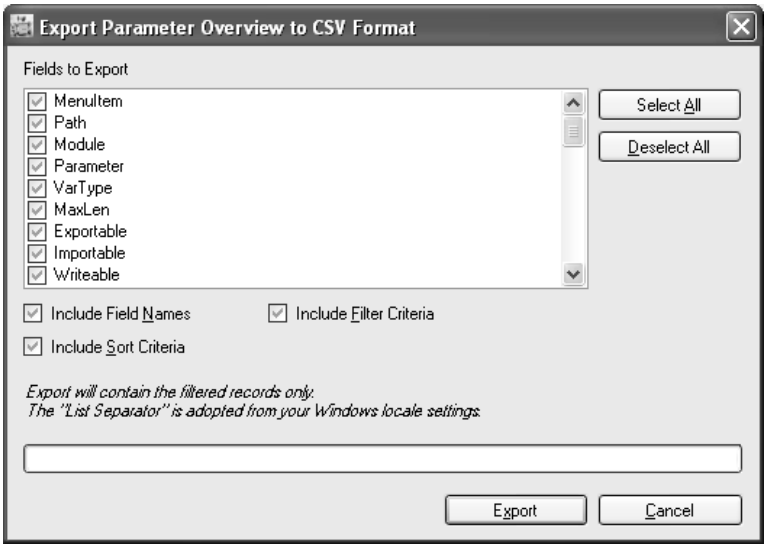

Figure 7-44: Export parameter overview

Click the button “Export”.
In the output dialog box that appears:
Specify the location where you want to store the file.
Type a unique file name for the document.
Click the button “Save”.

Saving a parameter file in .XML format

Saving and storing the parameter file as in .XML format is an important feature. In case of the unexpected event of a problem, you may need the file in this format to reload the parameters in the processor of the ultrasonic liquid flowmeter, for example after replacing the electronic unit. In order to store the parameter list in .XML format:

- Click Reporting to open the Reporting submenu.
- Click Parameters to open a window in which all parameters are listed.
- Click Reports and Exports.
- Click Export to XML.
- In the window that appears click Export to confirm.
- In the output dialog box that appears: specify the location where you want to store the file.
- Type a unique file name for the document.
- Click the button Save.

7.9.2 Reporting related to process values

For the reporting functions related to actual process values the same features and procedures are applicable as valid for the parameters.

7.9.3 Reporting related to calibration parameters

The calibration parameters is a subset of the whole collection of parameters. The calibration parameters are those parameters that will effect the value of the measuring results. Do not modify these parameters after the meter has been calibrated.

For the reporting functions related to calibration parameters the same features and procedures are applicable as valid for the parameters.

7.9.4 Reporting related to privileges

For the reporting functions related to privileges the same features and procedures are applicable as valid for the parameters.

7.10 Logging data from a flowmeter

After connecting with a flowmeter, the default monitoring configuration file included in the "Quick Start" software package will start the logging process automatically. A predefined set of data will be collected from the meter and stored as a file on disk.
A field in the status bar at the bottom of the screen will show a field displaying "Log.ON" with a green background colour.

In the same field the name of the disk file where the data is stored is displayed between square brackets.

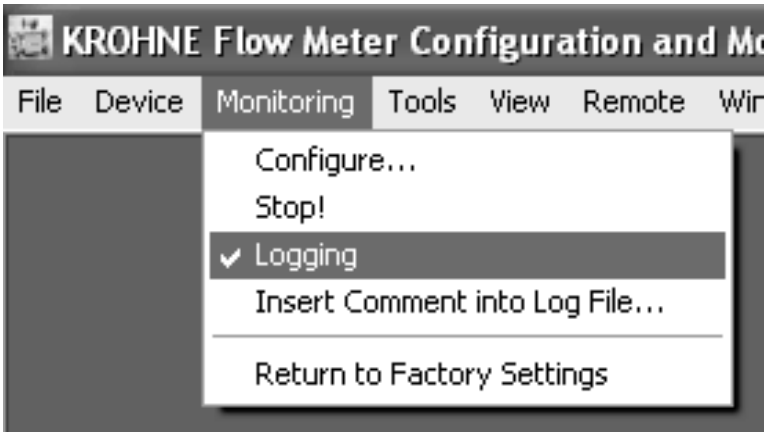

Figure 7-45: Monitoring menu

When you open the "Monitoring" menu you will observe also a check mark to the left of the option "Logging" when data is actually being logged.

To stop or interrupt the logging process:

Click the option “Logging”.
The check mark will now disappear, the field in the status bar at the bottom of the screen will become yellow and display “Log.OFF”:

Figure 7-46: Yellow color of Log.OFF

To restart the logging process:

Open the “Monitoring” menu.
Click “Logging”.
The check mark will reappear and the status field will display “Log.ON” and turn to green again.
Logged data will be stored in a file for each day (provided it is the same meter).
The software will automatically assign a name to file where the logged data will be stored, the date will be part of the file name.
When the logging process is restarted - after it has been interrupted – the new data will be appended to the same file as used before (assuming this will happen on the same day).
When a new day breaks a new log file will be created even while a logging process is running.
Logged data will be stored in a file with “.CSV” format.
By default, the file will be stored in the folder:
C:\KrohneData\Logging\MeterModel\Meters\MeterSerialNumber

Some of the actions above or the way the service tool performs depend on specific settings. How settings can influence the way the service tool works is explained in the next chapter.

7.11 Customizing the data logging process

As the meter produces a large amount of data, it is not possible to collect all data at a high rate. Storing this amount of data would create log files of unpractical sizes.

Decide which data elements have to be collected and stored.

A first selection is already made when defining the set of data selected for the monitoring process. The set of data to be saved in a log file on disk must be the same as selected for monitoring or a subset thereof.

Another way to reduce the amount is implemented by means of a setting “Log Rate”. This is either the same as the “Fetch Rate” (parameter value equal to 1) or it is a fraction of the “Fetch rate” (integer parameter value 2..10).

Set “Log Rate”

Click “Monitoring” to open the “Monitoring” menu.

Click “Configure…” to open the Monitoring Configuration window.

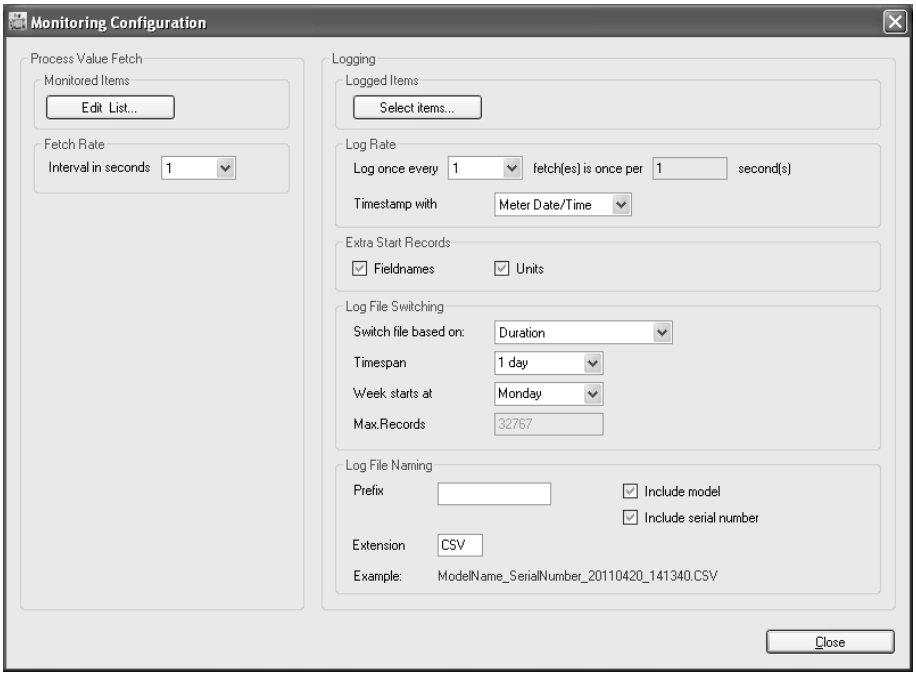

Figure 7-47: Monitoring configuration

Click the down arrow to the right of the box log rate.
Select a value.

Example (as displayed above): When the “Fetch Rate” equals 2, the set of data collected from the flowmeter is refreshed every 2 seconds. When the “Log Rate” is set to 5, the fifth of each set of data collected from the flowmeter will be stored in the log file. Effectively this means a set of data is stored in the log file every 10 seconds.

Select the data items to be stored in the log file.

INFORMATION!
It is recommended not to decide lightly to make changes to the set of data being stored in a log file. The result might be in the .CSV file, and consequently in a related Excel file, specific data items will appear in another sequence or in other columns as before. Tools developed for processing and analyzing the data in the .CSV file or in the Excel file may no longer work properly and as expected.

In case you want to make changes to the data stored in the log file:

To define or select the data items to be stored in the log file:

Click “Monitoring” to open the “Monitoring” menu.

Click “Configure…” to open the Monitoring Configuration window.

In the Monitoring Configuration window as above:

Click “Select Items”.

The window “Monitoring List Editor” will open:

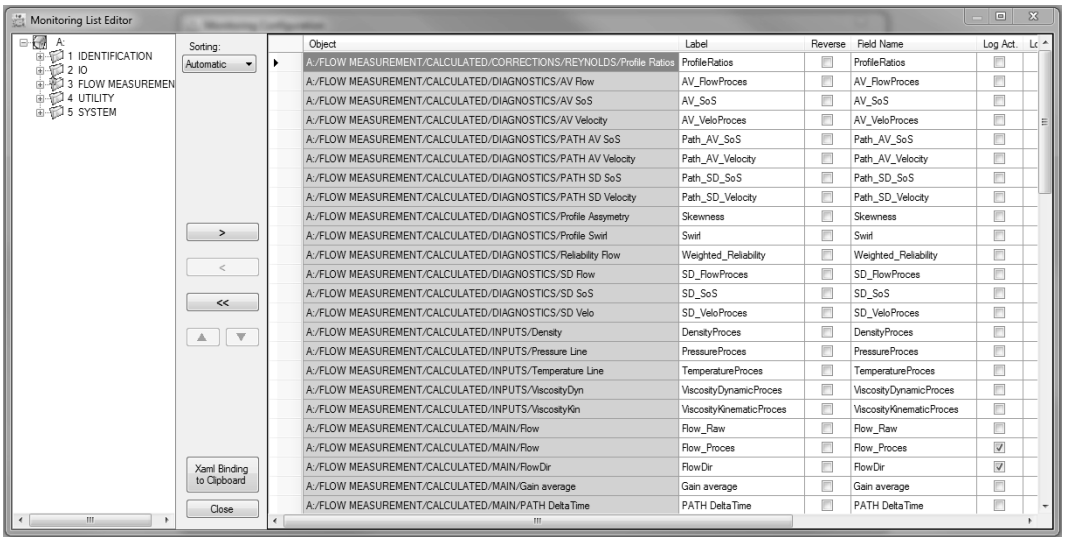

Figure 7-48: Monitoring List Editor

The variables listed in the window are the variables selected for being collected for monitoring purposes.

INFORMATION!

- *It is possible to store different representations of any variable: the actual value, the average value, the minimum value or the maximum value.*
- *Here the average, the minimum and the maximum relate to the number of “Fetches” represented by the set of data that is being stored. (A “Fetch” can be regarded as a sample including the actual values of all the selected variables at a specific instant.)*
- *As an example, this means: in case one set of data is logged every time 5 “Fetches” are completed, the “Actual” is one value of that particular variable (the most recent value from the values as present in the 5 most recent “Fetches” or samples).*
- *“Average” is the average of the values of a particular variable as present in the most recent 5 samples or “Fetches”. The same applies to “Minimum” and “Maximum”.*

Use the horizontal scroll bar to make the logging-specific columns visible in the window. The headers of these columns reads:

- Log Act.
- Log Avg.
- Log Min.
- Log Max.

Select a check mark in any of these columns to indicate which representations of a specific variable are included in the logged data.

Missing items in the list of monitored variables can be added here as well:

Step 1: Open the tree structure in the small panel in the left side of the window.

Step 2: Open the folders to the level where individual variable names become visible.

Step 3: (Variables already included in the monitoring list will have a green background colour).

Step 4: Find the variable you want to add in order to be included in the logging.

Step 5: Click on the variable to select it.

Step 6: Click on the button pointing to the right in the panel in the middle.

Step 7: Put check marks in the columns for the representations you want to be logged.

Step 8: Click the Monitoring List Editor's "Close" button.

Step 9: Click the Monitoring Configuration dialogue's "Close" button to accept the configuration. A confirmation dialogue appears:

Figure 7-49: Monitoring

Step 10: Click "Yes" to confirm that you want to resume monitoring the flowmeter.

Some more features to customize the logged data file
(In the window "Monitoring configuration")

Time stamp

The time stamp associated with each data record can be the date and time from the meter itself or from your computer system. Select what you want from the value list associated with the box "Timestamp with".

Start Records

When starting or restarting your logging you can include a record with the names of the fields and/or the units used. In the Excel file these will appear as column headers (one row with field names and one row with the units used).

Log file size limitation

The size of a log file can be limited either to a maximum number of records or to a maximum time span.
In the value list of the box “Switch file based on;” click either

- Duration, or
- Number of records

For Duration, select a time span of:

- 1 hour
- 4 hours
- 12 hours
- 1 day
- 1 week

Click on your choice in the value list associated with the box “ Timespan”. New intervals start at multiples of the selected “Timespan”. In case of week the start of a new interval (and the end of the previous interval) occurs on the day specified by “Week starts at”.

When using “Number of records”, specify any number of records in the box “Max.Records”. However it is not recommended to choose a value over 32767 (which is the maximum number of rows that older versions of Microsoft Excel can handle).

Log file name

Date and time are automatically included in the log file name.

Add a prefix of your own choice: for example the name of your company, the name of a site/plant or the name of a person.

You can also include the meter model number in the log file name and or include the meter serial number. Select or disable the associated boxes.

It is not recommended to change the extension of the log file name, however if you have good reasons to do so it is possible. Just fill three characters according to your choice in the box “Extension”.

Storage location

By default the location for storing log files on the hard disk of your computer is: "C:\KrohneData\Logging".

Dependant of meter model and serial number, subfolders will automatically be created for well organized archiving of log files.

You can store you files in another location. For example this can be a drive for centralized storage of meter data in a network.

To set the location where you want your data to be stored:

Step 1: Click the menu button “Tools” to open the Tools menu.

Step 2: Click “Settings…” to open the “Settings” window below:

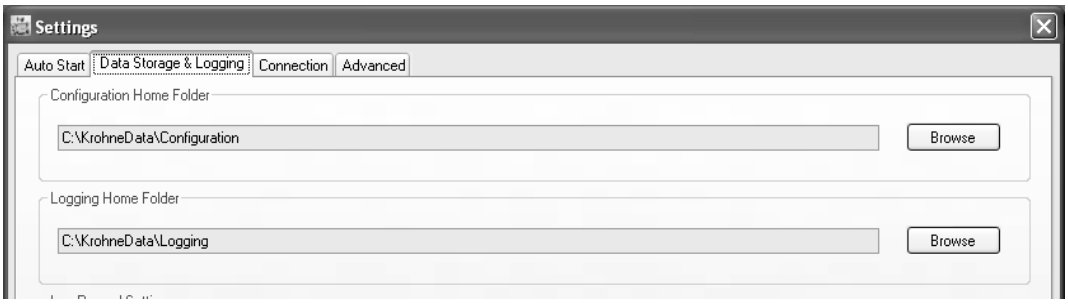

Figure 7-50: Settings

Step 3: Type in the box “Logging Home Folder” the name (and path) of the directory where you want your data to be stored.

7.12 Adjusting parameter settings

A typical adjustment of the parameter setting is the adjustment of the meter factor.
The meter factor is determined during the calibration and is programmed before the ultrasonic flowmeter is sealed.
Adjustment of the meter factor for Custody Transfer (CT) applications can only be done under the supervision of a calibration officer. A dedicated procedure for calibration adjustment and programming the meter is available from KROHNE on request.

7.12.1 Adjusting meter factor

CAUTION!
Only for authorised personnel!

A typical adjustment of the parameter settings is the adjustment of the meter factor. This meter factor is determined during calibration and is programmed before the ultrasonic flowmeter is sealed.

Adjustment of the meter factor for CT applications can only be done under supervision of a calibrating officer.

Step 1: Open the Object Tree Details (from the View menu):

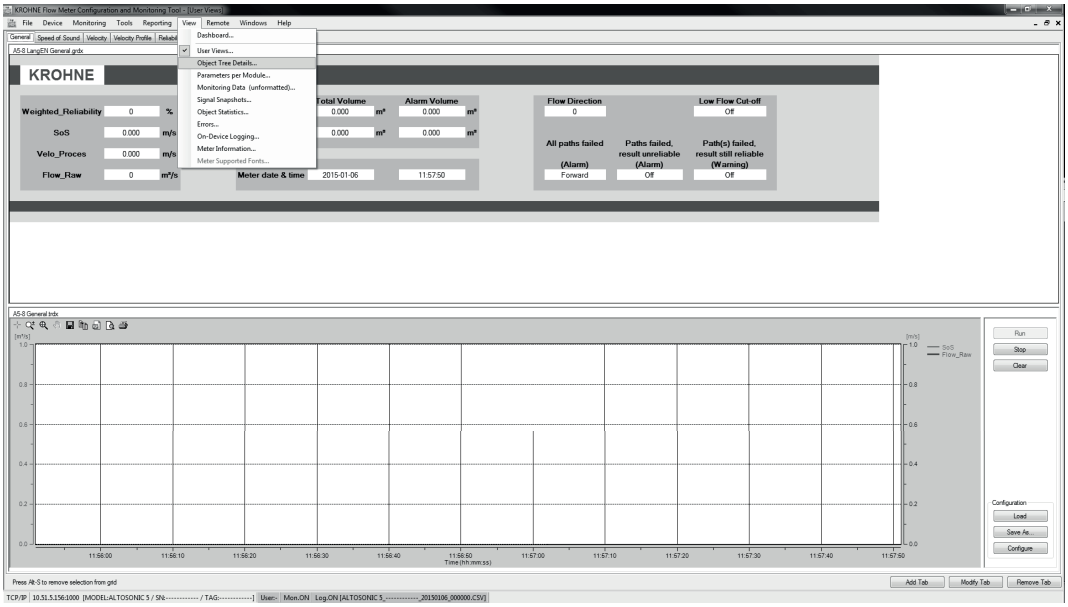

Figure 7-51: View menu

Step 2: Open the tree by clicking on “+”.

Figure 7-52: Object tree details

Step 3: Go to “FlowCalculationModule > Configuration > Flow Calcs > MeterConstant_Fwd” (the numbering may differ from the example below):

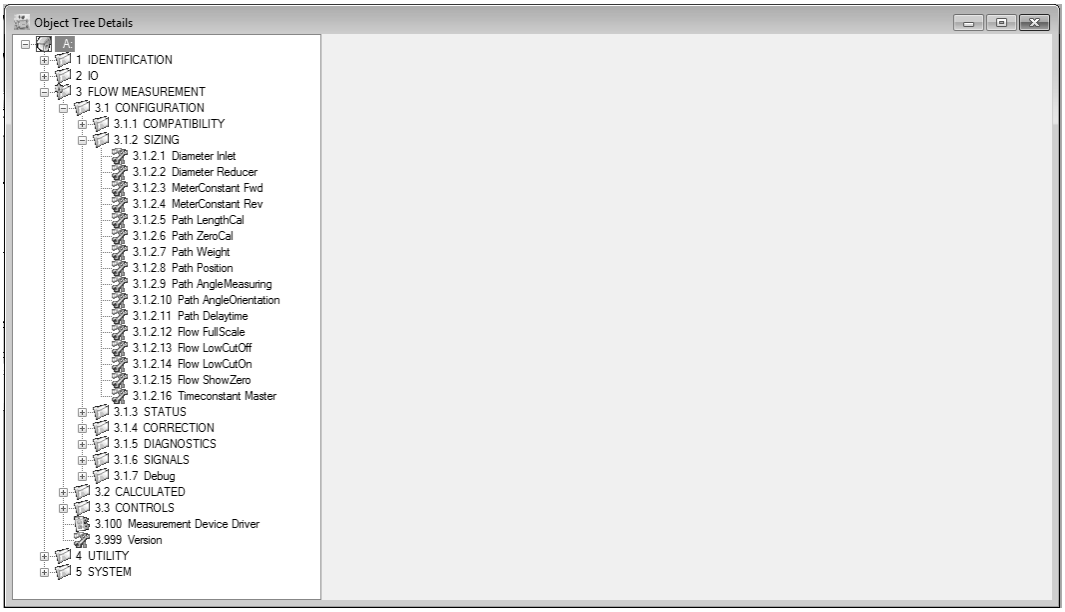

Figure 7-53: Object tree meter constant

The right side of the screen shows the following information:

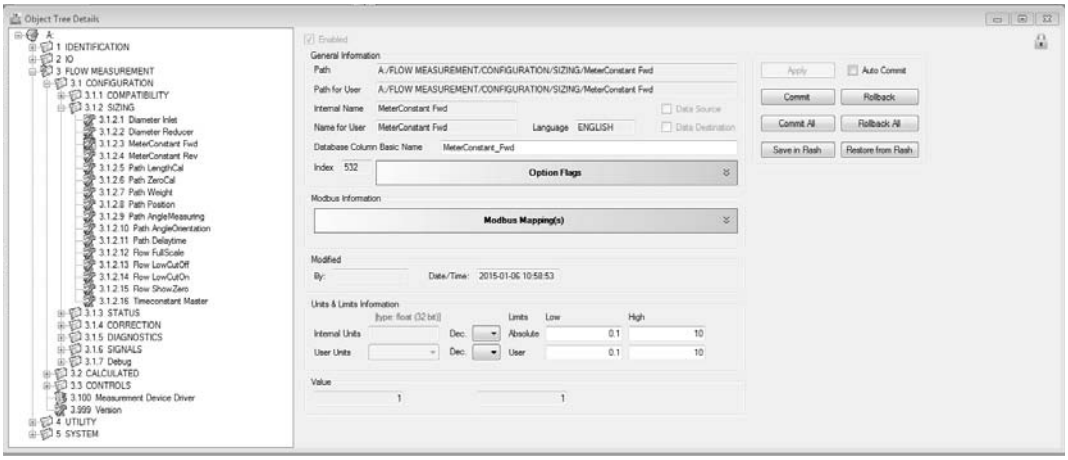

Figure 7-54: Setting meter constant

Step 4: Enter the meter factor in the “Value” field.

Step 5: Click “Apply”.

Step 6: Click “Save in Flash”.

Wait until the “Writing data to flash disk” pop-up dialogue finishes.

Step 7: Save configuration file to your computer’s disk by clicking on File > Save Flowmeter Configuration as XML file.

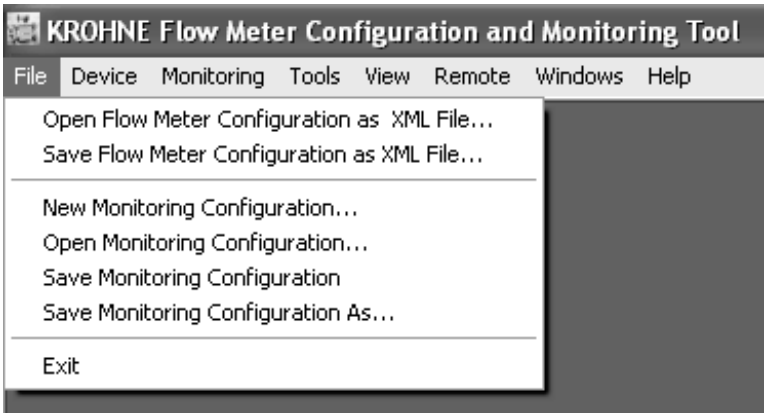

Figure 7-55: File menu

7.13 Adjusting the display settings

The display settings can be changed in a few steps.

Step 1: In the "View" menu, open "Parameters per Module...".

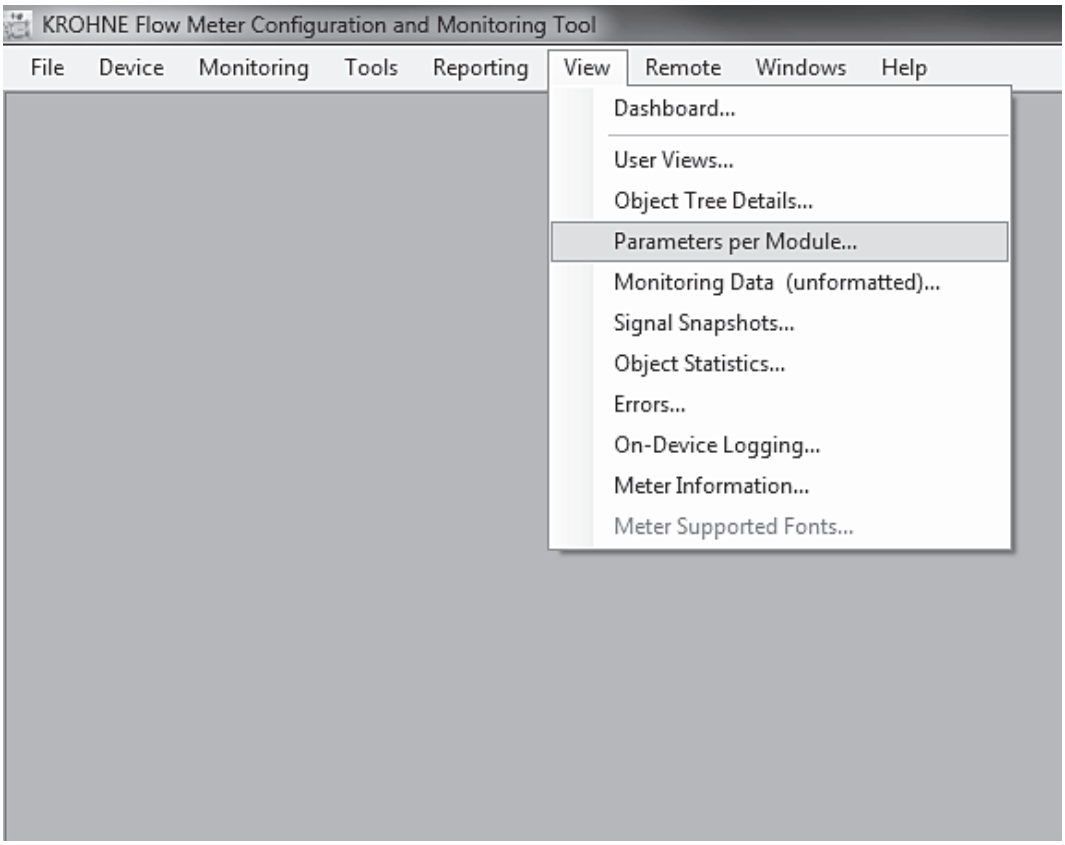

Step 2: Click on the "+" to open the tree.

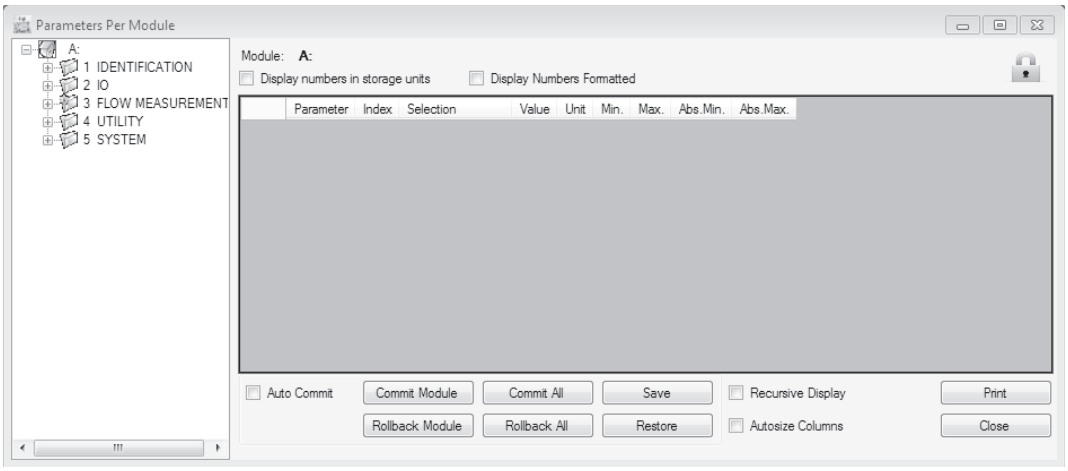

Step 3: Select "IO > Displays > Modbus Displays > External Display 1"
(The number can be different)

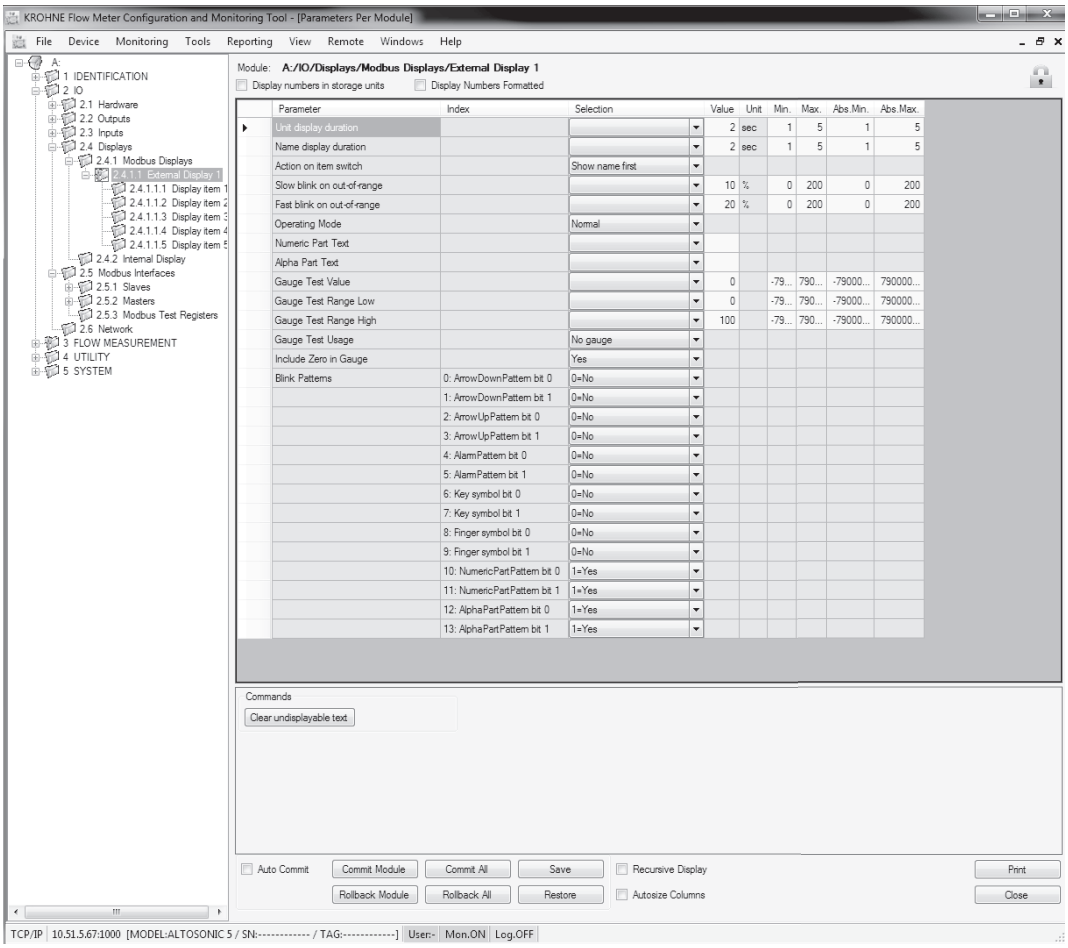

Step 4: Set the required settings for the display.

Item	Explanation
Unit display duration	Time that the unit is displayed.
Name display duration	Time that the name is displayed.
Action on item switch	Choose whether to start with the name, the unit or to continue with a display cycle when a new item is shown.
Slow blink on out-of-range	The bar blinks slowly when the shown parameter is outside the percentage of the indicated limit.
Fast blink on out-of-range	The bar blinks fast when the shown parameter is outside the percentage of the indicated limit.
Operating Mode	Normal mode shows configured items on the display test shows the following parameters and blinking pattern.
Numeric Part Text	Number to be shown on the display during test.
Alpha Part Text	Text to be shown on the display during test.
Gauge Test Value	Value during test.
Gauge Test Range Low	Low range during test.
Gauge Test Range High	High range during test.
Gauge Test Usage	Choose if bar is used to display value.
Include Zero in Gauge	Indicated where the zero of the bar starts, with zero or minimum range value during test.
Blink Patterns	Blinking pattern used during test.

Step 5: Click "Save".
Wait until the "Writing data to flash disk" pop-up dialog completes.

Step 6: Click on "File > Save FlowmeterConfiguration as XML file" to save the configuration file to your computer.

Step 7: Select "IO > Displays > Modbus Displays > External Display 1 > Display item 1"
(The number can be different, up to 5 display items can be configured)

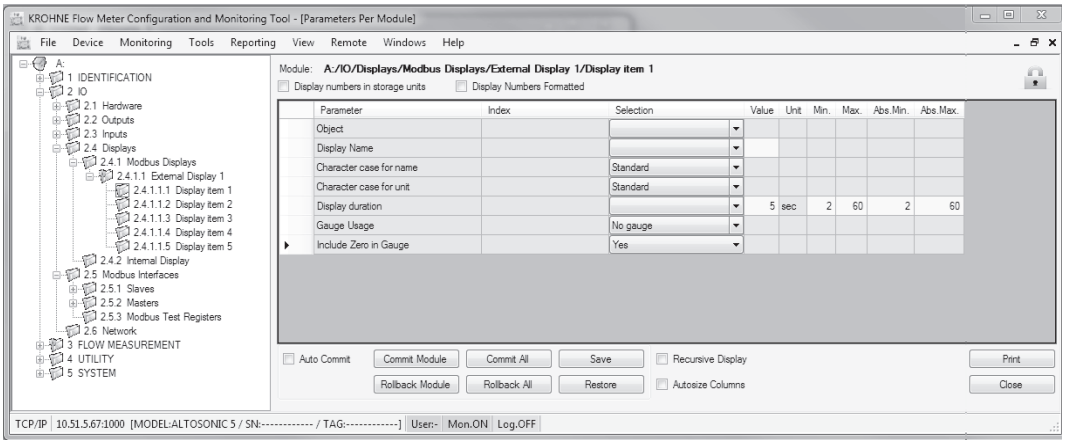

Step 8: Set the required settings for the items to display.

Item	Explanation
Object	The parameter to display.
Display name	The name for the parameter shown on the display.
Character case for name	Indicates how the name is presented (upper case, lower case or same as entered)
Character case for unit	Indicates how the unit is presented (upper case, lower case or same as entered)
Display duration	The time the object is displayed.
Gauge usage	Indicates the displayed parameter also on the gauge bargraph along the edge of the display.
Include Zero in Gauge	Determines where the 0% gauge indication starts, with Zero or at the minimum scale.

Step 9: Click "Save".
Wait until the "Writing data to flash disk" pop-up dialog completes.

Step 10: Click on "File > Save FlowmeterConfiguration as XML file" to save the configuration file to your computer.

8.1 Availability of services

The manufacturer offers a range of services to support the customer after expiration of the warranty. These include repair, maintenance, technical support and training.

INFORMATION!
For more precise information, please contact your local sales office.

8.2 Returning the device to the manufacturer

8.2.1 Returning the device to the manufacturer

This device has been carefully manufactured and tested. If installed and operated in accordance with these operating instructions, it will rarely present any problems.

CAUTION!
Should you nevertheless need to return a device for inspection or repair, please pay strict attention to the following points:

- *Due to statutory regulations on environmental protection and safeguarding the health and safety of our personnel, manufacturer may only handle, test and repair returned devices that have been in contact with products without risk to personnel and environment.*
- *This means that the manufacturer can only service this device if it is accompanied by the following certificate (see next section) confirming that the device is safe to handle.*
- *Use a corrosion protection such as Shell Ensis to avoid corrosion of the inner part of the flowmeter and the piping during transport.*

CAUTION!
If applicable, send the inlet section and / or flowconditioner together with the flowmeter if the flowmeter must be recalibrated. Otherwise, the flowmeter will be less accurate after the calibration.

8.2.2 Form (for copying) to accompany a returned device

CAUTION!
To avoid any risk for our service personel, this form has to be accessible from outside of the packaging with the returned device.

Company:		Address:
Department:		Name:
Tel. no.:		Fax no. and/or Email address:
Manufacturer's order no. or serial no.:		
The device has been operated with the following medium:		
This medium is:		radioactive
		water-hazardous
		toxic
		caustic
		flammable
		We checked that all cavities in the device are free from such substances.
		We have flushed out and neutralized all cavities in the device.
We hereby confirm that there is no risk to persons or the environment through any residual media contained in the device when it is returned.		
Date:		Signature:
Stamp:		

8.3 Disposal

CAUTION!
Disposal must be carried out in accordance with legislation applicable in your country.

Separate collection of WEEE (Waste Electrical and Electronic Equipment) in the European Union:

According to the directive 2012/19/EU, the monitoring and control instruments marked with the WEEE symbol and reaching their end-of-life **must not be disposed of with other waste**.
The user must dispose of the WEEE to a designated collection point for the recycling of WEEE or send them back to our local organisation or authorised representative.

9.1 Measuring principle

The ultrasonic liquid flowmeter operates according to the principle of measuring the transit time of an ultrasonic sound wave. The liquid velocity is derived from the difference in transit time of a sound wave travelling in a direction with the flow direction and the sound wave travelling in the opposite direction. The trajectory of the sound wave is called the acoustic path.

9.2 Transit time measuring principle

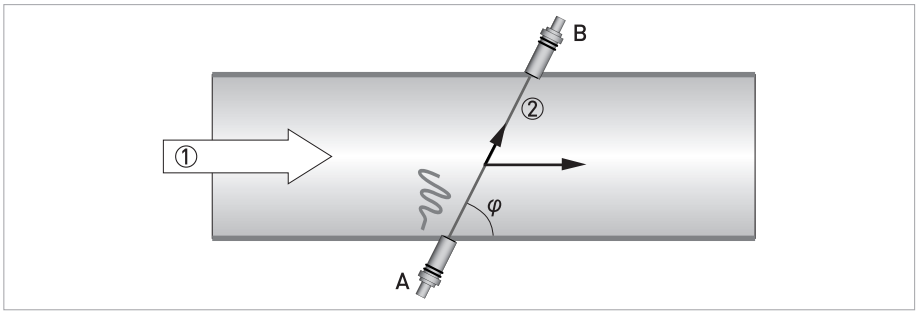

Figure 9-1: Transit time measuring principle

① Direction of the flow
② Component of velocity in the direction of the chord

In a pipe section two transducers A and B create an acoustic path, which in the above figure, is a single chord. This chord is the distance between transducer A and B and has a length L. The chord intersects with the centre line of the pipe at an angle φ.
Both transducers are capable to transmit and receive an ultrasonic signal. First, one transducer acts as a transmitter and the other as receiver, then the other way around. The transit time of an ultrasonic signal along a measuring chord is influenced by the velocity of the flow (v). If the flow is zero the transit time from transducer A to B is exactly the same as the transit time from transducer B to A (determined by the speed of sound in the liquid).
When the liquid flows with a velocity v and with c being the speed of sound in the liquid:
v.cos(φ) is the component of velocity in the direction of the measurement chord.

This component increases or decreases the travel time (time of flight of an acoustic waveform) as it moves from one transducer to the other transducer. The transit time from transducer A to B (t_{AB}) is:

$$t_{AB} = \frac{L}{c + v \cos \varphi} \qquad (1)$$

In opposite direction from transducer B to A the transit time (t_{BA}) is:

$$t_{BA} = \frac{L}{c - v \cos \varphi} \qquad (2)$$

The velocity of the liquid is derived from formula (1) and (2) as:

$$v = \frac{L}{2\cos\varphi} \cdot \left(\frac{1}{t_{AB}} - \frac{1}{t_{BA}} \right) \qquad (3)$$

An important feature of this method is that the calculated velocity does not depend on the speed of sound in the liquid or liquid properties in general. The velocity as calculated is only a function of the measured transit times t_{AB} and t_{BA}; the length of the chord and the angle of intersection of the measuring chord are supposed to be known from the design of the flowmeter.

As a “bonus” the speed of sound in the liquid can be derived from formula (1) and (2) as :

$$c = \frac{L}{2} \cdot \left(\frac{1}{t_{AB}} + \frac{1}{t_{BA}} \right) \qquad (4)$$

This gives a measured speed of sound value, a valuable tool for diagnostic purposes, as it can be compared with data from other sources.

9.3 Technical data table

INFORMATION!

- *The following data is provided for general applications. If you require data that is more relevant to your specific application, please contact us or your local sales office.*
- *Additional information (certificates, special tools, software,...) and complete product documentation can be downloaded free of charge from the website (Downloadcenter).*

Measuring system

Measuring principle	Ultrasonic transit time
Application range	Flow measurement of liquids in custody transfer applications
Versions	Standard (STD)
	High Viscosity (HV)
	Low Temperature (LT)
	High Temperature (HT)
Measured value	Actual volume flow
Calculated value	Totalized flow, velocity of sound

Design

General	The ALTOSONIC 5 flowmeter consists of a flow sensor and a signal converter.
Flow sensor	
Construction	The flow sensor has an eight-path design with a central path for turbulent, transition or laminar flow differentation. It also includes a dedicated vertical diagnostic path for full pipe guarantee.
Nominal diameter	4"...24" / DN100...600
	Other diameters on request.
Signal converter	
Construction	The remote flameproof signal converter calculates the volume flow and the totalized volume, performs diagnostics and provides data logging functionality.
Functionality	Calculation of totalised volume
	Diagnosis of flow profiles
	Body temperature correction
	Logging of relevant parameters
	Optional display connection

Measuring accuracy

Measuring range	0...15 m/s (bidirectional)
	Reduced bore:
	Reynolds range: no limits (turbulent, transition and laminar flow regimes)
	Certified for custody transfer: 0.2...15 m/s (bidirectional)
	Full bore:
	Reynolds range: > 10000
	Certified for custody transfer: 0.5...15 m/s (bidirectional)
Linearity	0.10%, for Reynolds range > 10000 with a turndown of 30:1 (0.5...15 m/s)
	0.15%, for whole Reynolds range with a turndown of 75:1 (0.2...15 m/s)
Uncertainty	< ±0.027% according to API
Repeatability	according to API chapter 5.8 table B1
Zero stability	< 0.2 mm/s
Certified turndown	75:1

Ambient temperatures

Flow sensor	
ATEX, IECEx, DIV1/ZONE1	Standard: -20…+65°C / -4…+149°F
	Optional: -55…+65°C / -67…+149°F
Storage temperature	-40…+65°C / -40…+149°F
Signal converter	
ATEX	Standard: -20…+55°C / -4…+131°F
	Standard + heating: -50…+55°C / -58…+131°F
	Optional: -55…+55°C / -67…+131°F
IECEx	Standard: -20…+55°C / -4…+131°F
	Standard + heating: -50…+55°C / -58…+131°F
DIV1 / ZONE1 (C/US)	Standard: -20…+55°C / -4…+131°F
	Standard + heating: -55…+55°C / -67…+131°F
Storage temperature	-40…+65°C / -40…+149°F

Process conditions

Process temperature	Standard version: -40...+120°C / -40...+240°F	
	Low temperature version: -200...+120°C / -328...+240°F	
	High temperature version: -40...+250°C / -40...+482°F	
	High viscosity version: -40...+120°C / -40...+240°F	
Viscosity range	All versions: 0.1...150 cSt	
	High viscosity version: 0.1...1500 cSt	
Pressure range	ASME 150...600	
	Pressure rating according to ASME B16.5 (-29...+38°C / -20...+100°F):	
	Class 150 lbs:	Stainless steel: 19.0 bar / 275 psi
		Carbon steel: 19.6 bar / 285 psi
	Class 300 lbs:	Stainless steel: 49.6 bar / 720 psi
		Carbon steel: 51.1 bar / 740 psi
	Class 600 lbs:	Stainless steel: 99.3 bar / 1440 psi
		Carbon steel: 102.1 bar / 1480 psi
	Other pressure ranges on request.	
Minimum pressure requirement	For detailed information, refer to *Backpressure* on page 28.	
Water content	Velocity above 1 m/s: ≤ 6%	
	Velocity above 2 m/s: ≤ 10%	
Solids content	< 5% (volume)	
Air/gas content	< 2% (volume)	

Installation conditions

Installation	For detailed information, refer to *Mechanical installation* on page 20.
Dimensions and weights	For detailed information, refer to *Dimensions and weights* on page 109.
Altitude	< 2000 m
Overvoltage category	II
Pollution degree	3

Materials

Flanges (RF)	Stainless steel AISI 316 / 316 L (1.4404) (dual certified)
	Carbon steel ASTM A105 / A350 Gr.LF2
	Other materials / flange types on request
Measuring tube	Stainless steel AISI 316 / 316 L (1.4404) (dual certified)
	Carbon steel ASTM A105 / A350 Gr.LF2 / A106 Gr.B / A333 Gr.6
	Other materials on request
Converter housing	Standard: Copper free aluminum
	Option: Stainless steel 316 (1.4408) for offshore applications
Coating	Standard: Blasted (not coated)
	Option: Epoxy coating RAL 9006 (silver)
	Option: Offshore coating RAL 9006 (silver)

Electrical connections

Power supply	24 VDC +10%/-15%, 4A fuse, internally isolated
Power consumption	Standard version: 25...28 W
	With optional heater for low ambient temperatures: 24 VDC 175 W
Transducer signals	Intrinsically safe flow sensor circuits:
	U_i = 18 V, I_i = 210 mA, C_i = 100 nF, L_i = 700 µH, P_i = 1 W
	Intrinsically safe signal converter circuits:
	U_o = 6.51 V, I_o = 208 mA, C_o = 22 µF, L_o = 1.5 mH, P_o = 0.34 W
PT100 signal	Intrinsically safe (ia) circuit:
	U_i = 10 V, I_i = 10 mA, P_i = 200 mW
Cable entries	Standard: M20 x 1.5
	Option: ½" NPT, PF ½

Inputs and outputs

Available options	1x Ethernet
	4x RS485 serial Modbus master / slave output
	4x (Basic IO) or 8x (optional, extended IO) IO configurable input/output with: - Digital dual pulse, phase shifted - Alams - Analog values 0/4...20 mA inputs/outputs All circuits: galvanically isolated, rated < 16 V r.m.s. / 22.6 V peak / < 35 VDC
MODBUS	
Description	Modbus RTU or Modbus ASCII, Slave, RS485 (galvanically isolated)
Transmission procedure	Half duplex, asynchronous
Address range	1...247
Supported function codes	03, 04, 06, 08, 16
Supported Baudrate	50, 75. 110, 150, 300, 600, 1200, 2400, 4800, 9600, 19200, 38400, 56000, 64000, 115200, 128000 Baud

Approvals and certificates

CE			
	This device fulfills the statutory requirements of the EC directives. The manufacturer certifies successful testing of the product by applying the CE mark.		
Electromagnetic compatibility	Directive: 2004/108/EC, NAMUR NE21/04		
	Harmonized standard: EN 61326-1		
Pressure Equipment Directive	Directive: 97/23/EC		
	Category I, II, III		
	Liquid group 1		
	Production module H		
Hazardous areas			
		Marking	Approval
ATEX	Flow sensor	II 2G Ex ia IIC T6...T2 Gb	FTZU 14 ATEX 0024X
	Signal converter	II 2G Ex d [ia] IIB T5 Gb	FTZU 14 ATEX 0131X
IECEx	Flow sensor	Ex ia IIC T6...T2 G	IECEX FTZU 14 .0020X
	Signal converter	Ex d [ia] IIB T5 Gb	IECEX FTZU 14.0029X
DIV 1	Flow sensor	Class I, Groups B, C, D, temp class T6…T2	LR 1338-1
	Signal converter	Class I, Groups B, C, D, temp class T5	LR 1338-2
Zone (Canada)	Flow sensor	Ex ia IIB+H2 T6…T2 Gb	LR 1338-1
	Signal converter	Ex ia IIB+H2 T5 Gb	LR 1338-2
Zone, ANSI/ISA (USA)	Flow sensor	Class I, Zone 1, AEx [ia] IIC T6…T2	LR 1338-1
	Signal converter	Class I, Zone 1, AEx d [ia] IIC T5	LR 1338-2
Other approvals and standards			
Ingress protection	IP66 or NEMA Type 4X		
OIML - R117	OIML TC 8548		

9.4 Dimensions and weights

INFORMATION!

- *All dimensions are provided as indication. They can vary slightly with different schedule sizes.*
- *Values for larger diameters are available on request.*

Flow sensor

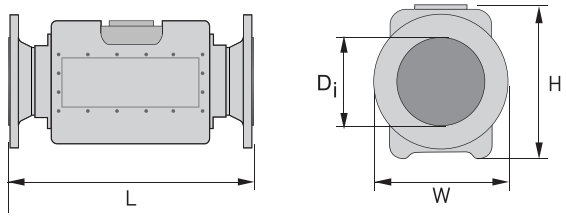

Figure 9-2: Dimensions of flow sensor

ASME 150 lb

Nominal size	Metric					Imperial				
	H [mm]	L [mm]	W [mm]	D_i [mm]	Weight [kg]	H [inch]	L [inch]	W [inch]	D_i [inch]	Weight [lbs]
4" / DN100	289	500	330	102.26	175	11.38	19.69	12.99	4.026	385
6" / DN150	340	600	380	154.08	310	13.39	23.62	14.96	6.066	682
8" / DN200	408	600	369	202.74	320	16.06	23.62	14.53	7.982	704
10" / DN250	510	900	450	254.56	230	20.08	35.43	17.72	10.022	506
12" / DN300	530	1000	490	304.74	310	20.87	39.37	19.29	11.998	682
14" / DN350	540	1100	540	336.54	460	21.26	43.31	21.26	13.250	1012
16" / DN400	600	1200	600	387.34	600	23.62	47.24	23.62	15.250	1320
18" / DN450	650	1350	635	437.94	860	25.59	53.15	25.00	17.242	1892
20" / DN500	700	1400	700	482.6	960	27.56	55.12	27.56	19.000	2112
24" / DN600	820	1650	820	584.2	1050	32.28	64.96	32.28	23.000	2310

ASME 300 lb

Nominal size	Metric					Imperial				
	H [mm]	L [mm]	W [mm]	D_i [mm]	Weight [kg]	H [inch]	L [inch]	W [inch]	D_i [inch]	Weight [lbs]
4" / DN100	289	500	330	102.26	195	11.38	19.69	12.99	4.026	429
6" / DN150	340	600	380	154.08	325	13.39	23.62	14.96	6.066	715
8" / DN200	396	600	343	202.74	335	15.59	23.62	13.50	7.982	737
10" / DN250	510	950	450	254.56	260	20.08	37.40	17.72	10.022	572
12" / DN300	530	1050	520	304.74	360	20.87	41.34	20.47	11.998	792
14" / DN350	590	1100	590	330.2	440	23.23	43.31	23.23	13.000	968
16" / DN400	650	1200	650	381	690	25.59	47.24	25.59	15.000	1518
18" / DN450	710	1350	710	428.6	900	27.95	53.15	27.95	16.874	1980
20" / DN500	780	1400	780	477.82	1120	30.71	55.12	30.71	18.812	2464
24" / DN600	920	1650	920	574.64	1300	36.22	64.96	36.22	22.624	2860

ASME 600 lb

Nominal size	Metric					Imperial				
	H [mm]	L [mm]	W [mm]	D_i [mm]	Weight [kg]	H [inch]	L [inch]	W [inch]	D_i [inch]	Weight [lbs]
4" / DN100	289	500	330	102.26	205	11.38	19.69	12.99	4.026	451
6" / DN150	340	600	380	148.36	350	13.39	23.62	14.96	5.762	770
8" / DN200	396	650	343	193.7	370	15.59	25.59	13.50	7.626	814
10" / DN250	510	1000	510	242.92	400	20.08	37.40	20.08	9.564	880
12" / DN300	560	1050	560	288.84	480	22.05	41.34	22.05	11.372	1056
14" / DN350	610	1150	610	317.5	650	24.02	45.28	24.02	12.500	1430
16" / DN400	690	1200	690	363.52	810	27.17	49.21	27.17	14.312	1782
18" / DN450	750	1300	750	409.3	960	29.53	51.18	29.53	16.11	2116
20" / DN500	820	1400	820	455.6	1250	32.28	55.12	32.28	17.94	2756
24" / DN600	940	1600	940	547.7	1910	37.01	62.99	37.01	21.56	4211

Signal converter

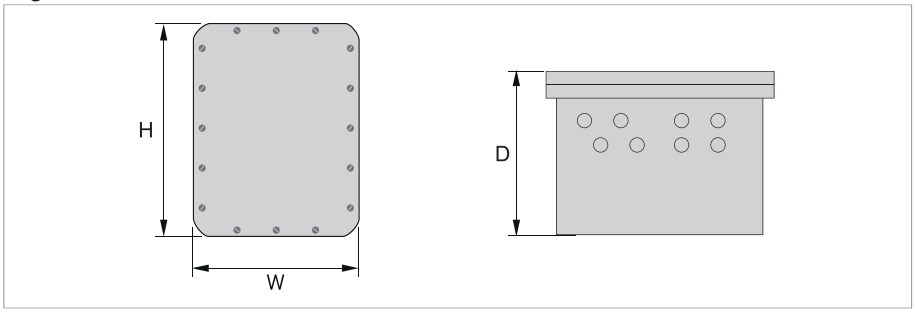

Figure 9-3: Dimensions of signal converter housing

Signal converter housing

Version	Metric				Imperial			
	H [mm]	W [mm]	D [mm]	Weight [kg]	H [inch]	W [inch]	D [inch]	Weight [lbs]
Aluminium (standard)	432	332	299	25.4	17.01	13.07	11.77	56.0
Stainless steel (offshore)	432	382	286	75	17.01	15.04	11.26	165.3
Aluminium (DIV 1 approved)	584	432	292	64	22.92	17.01	11.50	141.1

9.5 Flow table

Nominal size	Metric		Imperial	
	Q_{min} [m^3/h] 0.2 m/s	Q_{max}* [m^3/h] 15 m/s	Q_{min} [bbl/h] 0.7 ft/s	Q_{max}* [bbl/h] 50 ft/s
4" / DN100	5.6	425	35	2660
6" / DN150	12.6	950	80	5950
8" / DN200	22.6	1700	140	10700
10" / DN250	36	2700	225	17000
12" / DN300	50	3750	315	23500
14" / DN350	70	5250	440	32900
16" / DN400	90	6750	565	42300
18" / DN450	114	8560	715	53750
20" / DN500	140	10500	880	65850
24" / DN600	200	15000	1255	94000
*Ensure that there is enough backpressure to avoid flashing.				
Calculations are provided as indication, please ask KROHNE for detailed sizing.				

10.1 Introduction

This chapter describes how to use the Modbus protocol with the flowmeter. Within this chapter, the following abbreviations are used for the ALTOSONIC 5 sytem:
UFS-5: Ultrasonic Flow Sensor
UFC-5: Ultrasonic Flow Converter (normally called 'signal converter')

For communication with host systems, the signal converter emulates a Modbus compatible controller.
The Modbus protocol defines a message structure that controllers will recognise and use, regardless of the type of network over which they communicate. It describes:

- the process that a controller uses to request access to other devices.
- how it will respond to requests from the other devices.
- how errors will be detected and reported.

Controllers communicate is based on the master-slave principle. Only the master can initiate transactions (requests), and only the addressed device (slave) responds. In case of a broadcast request, none of the slaves will respond.

The Modbus request consists of:

- an address.
- a function code defining the requested action.
- data (if necessary for the requested function).
- an error check for testing the integrity of the message.

The response of the slave contains:

- the slave address.
- data conform the request type.
- an error check.

If the data integrity test fails, no response is sent back.
If a request can not be processed an exception message is returned.
Maximum total length of the data part is 256 bytes.

10.2 Serial transmission format

Two transmission modes can be used:

- ASCII
- RTU

The user has to select the desired mode along with the serial communication parameters (baud rate, parity).

INFORMATION!
All parameters must be the same for all controllers in the network.

10.2.1 ASCII mode

Each byte of the message is sent as two ASCII characters (two bytes). This means that only the ASCII characters 0-9, A-F are transmitted.

Standard serial communication parameters

Start bits	1
Data bits	7
Parity	odd/even/none
Stop bits	1 stop bit if parity is used
	2 stop bits if no parity is used
Error check field	Longitudinal Redundancy Check (LRC)

The advantage of ASCII mode is that it allows for a time interval up to 1 second between characters without causing a timeout.
A disadvantage of ASCII mode is the larger message length.

10.2.2 RTU mode

Each byte of the message is sent as 8 bits (one byte).

Standard serial communication parameters

Start bits	1
Data bits	8
Parity	even
Stop bits	1
Error check field	Cyclic Redundancy Check (CRC)

Standard serial communication parameters

Start bits	1
Data bits	8
Parity	even
Stop bits	1
Error check field	Cyclic Redundancy Check (CRC)

10.3 Modbus message framing

ASCII mode

In ASCII mode a message starts with a colon character (:) and ends with a carriage return-linefeed. Intervals up to one second can elapse between characters within the message. If the interval is longer, a timeout error occurs and the message is rejected.

RTU mode

In RTU mode a message starts with a silent time interval equivalent to at least 3.5 characters. The entire message frame must be transmitted as a continuous stream. If a silent interval of more than 3.5 character times occurs before completion of the frame, the receiving device flushes the incoming message and assumes that the next byte will be the address field for the new message.

For more info about the applied timeout values, .

Mode	Start	Address	Function	Data	Checksum	End
ASCII-mode	:	2 hex characters	2 hex characters	N*2 hex characters	LRC 2 hex characters	CR-LF
RTU-mode	3.5 characters silent interval	8 bits	8 bits	N*8 bits	CRC 16 bits	3.5 character silent interval

Table 10-1: Example of a typical message frame

10.3.1 Address Field (Device Address)

The address field of a message frame contains:

ASCII mode	2 characters
RTU mode	8 bits

Valid slave addresses are 1...247.
Address 0 is used for a broadcast to address all slaves.

10.3.2 Function Field

The function field of a message frame contains:

ASCII mode	2 characters
RTU mode	8 bits

Valid function codes are 1...127.
The function code tells the slave which kind of action to perform.
For information on the supported functions, refer to *Supported functions* on page 116.
A slave response always contains the function code of the request. If a function is not applicable, the slave sends an exception response. An exception is indicated by a returned function code with bit 8 (most significant bit) set.

10.3.3 Data Field

The data field contains 8 bit values (bytes) in the range of 0 to FF hexadecimal.
In ASCII mode, one datafield (one byte) is made up of two hex characters.

The data field of messages contains information which both master and slave use to perform an action. This includes the register address, quantity of registers, and the necessary data.
The endianness will determine which byte contains the most and the least signicant byte. The sequence can be determined in the configuration program.

10.3.4 Error checking methods

The contents of the error checking field for the entire message depend on the transmission mode.

Error check in ASCII mode transmission

When the ASCII mode is used, the error-checking field contains two ASCII characters. The error check characters are the result of a Longitudinal Redundancy Check (LRC) calculation. This is performed on the message content with exception of the beginning colon, the carriage return and line feed characters. The LRC characters are appended to the message as the last field preceding the CR-LF characters.
For more information about the Cyclic Redundancy Check, refer to *CRC codes* on page 147.

Error check in RTU mode transmission

When the RTU mode is used, the error-checking field contains a 16-bit value implemented as two bytes. The error check value is the result of a Cyclic Redundancy Check (CRC) calculation performed on the message content. The CRC field is appended to the message as the last field. For more information about the Cyclic Redundancy Check, refer to *CRC codes* on page 147.

10.3.5 Other error checking methods

Modbus uses two kinds of error checking methods:

- Character based check
  An additional parity bit for each character (even or odd parity).
- Message based check
  an additional error check calculated over the entire message.

Both character check and message check data is generated in the transmitting device and added to the message before transmission. The slave checks validity of each character during receipt and the validity of the entire message frame after receipt. The master has a predetermined timeout interval before aborting the transaction. This interval should be set long enough for any slave to be able to respond.

The timeout interval is set by the parameter **8.1.1.16 Tx time out**.

ASCII mode

In ASCII mode the maximum time between 2 characters is one second. If a longer interval occurs, the message will be ignored and the search for a starting character (colon) is resumed.

RTU mode

In RTU mode the entire message frame must be transmitted as a continuous stream. If a silent interval of more than 3.5 character times occurs before completion of the frame, the receiving device ignores the message and assumes the next byte will be the device-address field of a new message.

10.4 Physical communication layer

The Modbus protocol is a half-duplex protocol. The physical layer can be half or full duplex. The Modbus driver supports RS485 and TCP/IP communication layers

10.5 Supported functions

All data addresses in Modbus messages are referenced to zero. For example:

- Coil 1 is addressed as Coil 0001.
- Holding register 40001 is addressed as 40001. Note that the function code specifies the operation of a ‘holding register’, therefore the 40000 reference is explicit.

If a function that do not support broadcoast requests, receives an broadcast request, then the request will be rejected.

10.5.1 Function 01: READ COIL STATUS

Description

Function 1 reads the ON/OFF status of discrete inputs or discrete variables in the slave (0 x references called coils). Broadcast is not supported.

Query

The query specifies the starting coil and the quantity of coils to read.
The maximum number of coils requested each request is limited to 2000.

Example

Here is an example of a request to read coils 20-56 from slave device 17:

Header	Slave address	Function	Starting address		Number of data items		Error check	Trailer
--	11(h)	01(h)	Hi 00(h)	Low 13(h)	Hi 00(h)	Low 25(h)	--	--

Response

Header	Slave address	Funct.	Byte count	Data					Error check	Trailer
--	11(h)	01(h)	05(h)	(Coil 27-20 CD(h)	(Coil 35-28 6B(h)	(Coil 43-36 B2(h)	(Coil 51-44 0E(h)	(Coil 56-52 1B(h)	--	--

The coil status in the response message is packed as one coil per bit of the data field. Status is indicated as 1= ON, 0= OFF.
The LSB of the first data byte contains the coil addressed in the query. The other coils follow toward the high order end of this byte and from 'low order to high order' in subsequent bytes.
If the returned coil quantity is not a multiple of eight, the remaining bits in the final data byte will be padded with zeros (toward the high order end of the byte). The Byte Count field specifies the quantity of complete bytes of data.
The status of coils 27-20 is shown as the byte value CD hex, or binary 1100 1101.
Coil 27 is the MSB of this byte, and coil 20 is the LSB. Left to right, the status of coils 27 through 20 is ON-ON-OFF-OFF-ON-ON-OFF-ON.
By convention, bits within a byte are shown with the MSB to the left, and the LSB to the right. Thus the coils in the first byte are '27 through 20', from left to right, The next byte has coils '35 through 28', left to right. As the bits are transmitted serially, they flow from LSB to MSB: 20…27, 28...35, and so on.
In the last data byte, the status of coils 56-52 is shown as the byte value 1B hex, or binary 0001 1011. Coil 56 is in the fourth bit position from the left, and coil 52 is the LSB of this byte. The status of coils 56 through 52 is ON-ON-OFF-ON-ON.
Note how the three remaining bits (toward the high order end) are zero-filled.
If the request is not applicable an exception response will be sent.

For more information about the exception responses, refer to *Exception responses* on page 124.

10.5.2 Function 02: READ INPUT STATUS

In the UFC Modbus protocol, function 1 and 2 perform the same processing and are interchangeable.

For more information about the exception responses, refer to *Exception responses* on page 124.

10.5.3 Function 03: READ MULTIPLE HOLDING REGISTERS

Description

Function 03 reads the binary content of holding registers (4X references) in the slave.
Broadcast is not supported.
The maximum number of registers at each request is limited to 125 registers, 125 integers or 62 long integers or 62 floats or 31 doubles.

Query

The query message specifies the starting register and the quantity of registers to be read.
Registers are addressed starting at zero. Registers 1...16 are addressed as 0...15.

Example

Here is an axample of a request to read registers 40108...40110 from slave device 17:

Header	Slave address	Function	Starting address		Number of data items		Error check	Trailer
--	11(h)	03(h)	Hi 9C(h)	Low AB(h)	Hi 00(h)	Low 03(h)	--	--

Table 10-2: Example read holding registers

Response

Header	Slave addr.	Funct.	Byte count	Data						Error check	Trailer
--	11(h)	03(h)	06(h)	(Reg. 40108 Hi) 02(h)	(Reg. 40108 Low) 2B(h)	(Reg. 40109 Hi) 00(h)	(Reg. 40109 Low) 00(h)	(Reg. 40110 Hi) 00(h)	(Reg. 40110 Low) 64(h)	--	--

Table 10-3: Response read holding registers

The register data in the response message are packed as two bytes per register, with the binary contents right justified within each byte. For each register the first byte contains the high order byte, the second byte contains the low order bits.

The contents of register 40108 are shown as the two byte values of 02 2B hex (555 decimal). The contents of register 40109 is 00 00 hex (0 decimal) and of register 40110 is 00 64 hex (100 decimal).

If the request is not applicable, an exception response will be sent.
For more information, refer to *Exception responses* on page 124.

10.5.4 Function 04: READ INPUT REGISTERS

In the UFC Modbus protocol, function 3 and 4 perform the same processing and are interchangeable.

10.5.5 Function 05: WRITE SINGLE COIL

Description

Function 05 forces a single coil to either ON or OFF (0x reference).
When the address is a broadcast, all slaves will process the request.

Query

The query message specifies the coil reference to be forced. Coils are addressed starting at zero (coil 1 is addressed as zero).
The requested ON/OFF status is specified by a constant in the query data field. A value of FF 00 hex requests the coil to be ON. A value of 00 00 requests it to be OFF. All other values are illegal and do not affect the coil and generate an exception.

Example

Here is an example of a request to force coil 173 ON in slave device 17:

Header	Slave address	Function	Starting address		Number of data items		Error check	Trailer
--	11(h)	05(h)	Hi 9C(h)	Low EC(h)	Hi FF(h)	Low 00(h)	--	--

Response

The normal response is an echo of the query, returned after the coils state has been forced.

Header	Slave address	Funct.	Coil address		Data		Error check	Trailer
--	11(h)	05(h)	(Hi) 00(h)	Low AC(h)	Hi FF(h)	Low 00(h)	--	--

If the request is not applicable an exception response will be sent.

For more information about the exception responses, refer to *Exception responses* on page 124.

10.5.6 Function 06: WRITE SINGLE HOLDING REGISTER

Description

Function 06 presets a value into a single holding register (4x reference).
When the address is a broadcast, all slaves will process the request.

Query

The query specifies the register reference to be preset. Registers are starting at address zero.
The requested value (preset) is specified in the data field, which is a 16-bit value.

Example

Here is an example of a request to pre-set register 40002 to 00 03 in slave 17.

Header	Slave address	Function	Register address		Data		Error check	Trailer
--	11(h)	06(h)	Hi 9C(h)	Low 42(h)	Hi 00(h)	Low 03(h)	--	--

Table 10-4: Example write single holding register

Response

The response message is an echo of the query, returned after the register contents have been pre-set.

Header	Slave address	Function	Register address		Data		Error check	Trailer
--	11(h)	06(h)	Hi 9C(h)	Low 42(h)	Hi 00(h)	Low 03(h)	--	--

Table 10-5: Response write single holding register

If the request is not applicable, an exception response will be sent.
For more information about exception responses, refer to *Exception responses* on page 124.

10.5.7 Function 08: DIAGNOSTICS

Description

Function 8 provides a test for checking the communication system between the master and the slave.

Query

The function uses a two-byte sub-function field in the query to define the test to be performed:

Header	Slave address	Function	Sub-function	Data Hi+Lo	Error check	Trailer
--	11(h)	08(h)	00 00(h)	A1B8(h)	--	--

Table 10-6: Diagnostics

Only sub-function 0 is supported, which response is to loop back the query data.
Function 8 is only supported in slave mode.

10.5.8 Function 15: WRITE MULTIPLE COILS

Description

Function 15 forces each coil (0x reference) in a sequence of coils to either ON or OFF.
When the address is a broadcast, all slaves will process the request.

Query

The query message specifies the coil reference to be forced. Coils are addressed starting at zero (coil 1 is addressed as 0).

Example

Here is an example of a request to force a series of coils starting at coil 20 in slave 17. The query data contents are two bytes CD 01 hex, the binary bits correspond to the coils in the following way:

Bit	1	1	0	0	1	1	0	1	0	0	0	0	0	0	0	1
Coil	27	26	25	24	23	22	21	20	X	X	X	X	X	X	29	28

(X means don't care and are made zero.)

The first byte transmitted (CD) addressed coils 27…20, where by the least significant bit addresses the lowest coil (20) in this set.
The next byte transmitted (01) addresses coils 29 and 28, with the least significant bit addressing the lowest coil (28) in this set. Unused bits in the last data byte should be left zero.

Request

Header	Slave addr.	Fct.	Coil address		Quantity of points		Byte counts	Force data		Error check	Trailer
--	11(h)	0F(h)	Hi 00(h)	Low 13(h)	Hi 00(h)	Low 0A(h)	02(h)	Hi CD(h)	Low 01(h)	--	--

Response

The normal response returns the slave address, function code, starting address, and quantity of coils forced.

Header	Slave address	Function	Coil address		Quantity of points		Error check	Trailer
--	11(h)	0F(h)	Hi 00(h)	Low 13(h)	Hi 00(h)	Low 0A(h)	--	--

If the request is not applicable an exception response will be sent.

For more information about exception responses, refer to *Exception responses* on page 124 .

10.5.9 Function 16: WRITE MULTIPLE HOLDING REGISTERS

Description

Function 16 pre-sets values into a sequence of holding registers (4x reference).
When the address is a broadcast, the function pre-sets the same register references in all attached slaves.

Query

The query message specifies the register references to be pre-set. Registers are addressed starting at zero (register 1 is addressed as 0).

Example

Here is an example of a request to pre-set two registers starting at 40002 to 00 0A end 01 02 hex, in slave device 17.

Header	Slave addr.	Fct.	Starting address		Quantity		Byte counts	Data				Error check	Trailer
-	11(h)	10(h)	Hi 9C(h)	Low 41(h)	Hi 00(h)	Low 02(h)	04(h)	Hi 00(h)	Low 0A(h)	Hi 01(h)	Low 02(h)	-	-

Response

The normal response returns the slave address, the function code, starting address, and quantity of registers pre-set:

Header	Slave address	Function	Starting address		Quantity of points		Error check	Trailer
--	11(h)	10(h)	Hi 9C(h)	Low 41(h)	Hi 00(h)	Low 02(h)	--	--

Table 10-7: Response multiple holding registers

If the request is not applicable, an exception response will be sent.

For more information about exception responses, refer to *Exception responses* on page 124.

10.5.10 Exception responses

Except for broadcast messages, a master device expects a normal response, when it sends a query to a slave device. One of the four possible events can occur upon the master's query:

- If the slave device receives the query without a communication error and can handle the query normally, it returns a normal response.
- If the slave does not receive the query due to a communication error, no response is returned. The master program will eventually process a timeout condition for the query.
- If the slave receives the query, but detects a communication error (parity, CRC, LRC), no response is returned. The master program will eventually process a timeout condition for the query.
- If the slave receives the query without a communication error, but cannot handle it, the slave will return an exception response informing the master of the nature of the error.

The exception response message has two fields that differentiate it from a normal response, the Function code field and the Data field.

1. Function Code Field

In a normal response the slave echoes the function code of the original query in the function code field of the response. All function codes have a most significant bit of 0.
In an exception response the slave sets the most significant bit of the function code to 1.

The master recognises the exception response by means of this bit and can examine the data field for the exception code.

2. Data Field

In an exception response the slave returns an exception code in the data field. This defines the slave condition that caused the exception.

The exception response message:

Header	Slave address	Function	Exception code	Error check	Trailer

Exception codes (for example)

Code	Name	Meaning
01	Illegal function	The function code in the request is not an allowable action for the slave.
02	Illegal data address	The data address received in the query is not an allowable address for the slave.

10.6 Handling of large data types

The standard Modbus specification does not explain how data types larger than 16 bits should be handled. The standard Modbus functions to modify holding registers are used for handling larger data types.
Function 03 (read multiple holding registers), function 06 (write single holding register), and function 16 (write multiple holding registers) are used to read or modify these data types.
Each register area contains a datatype.

To be compatible with older systems, a parameter 8.1.1.6 COMPATIBILITY MODE controls how the registers are counted.

- In the "Modicon compatible mode", each address refers to a 16 bit register. Large data types will occupy multiple addresses.
- In the "not-Modicon compatible mode", each address refers to one data item, independent of of its type (length). Note that function 6 in not-Modicon compatible mode will also write one type of the accompanying data type!

The supported data types are:

- Boolean
- Integer (16 bit)
- Long integer (32 bit)
- Long long integer (64 bit)
- Float (32 bit)
- Double (64 bit)
- ASCII 8 Characters (64 bit)
- ASCII 16 Characters (128 bit)

The register ranges for each data type:

Function	Address range	Data Type	Numbers of registers to request for each data type	
			Modicon compatible	Not Modicon compatible
1, 2, 5, 15	1000...2999	Boolean	1	1
3, 4, 6, 16	3000...3999	Integer (16 bit)	1	1
	4000...4999	Long integer (32 bit)	2	1
	5000...5999	Long long integer (64 bit)	4	1
	7000...8999	Float (32 bit)	2	1
	9000...9999	Double (64 bit)	4	1
3, 16	13000...13999	ASCII (8 char.)	4	1
	14000...14999	ASCII (16 char.)	8	1

Note that in **Modicon compatible mode** each data type larger than 16 bits should be addressed as 16-bit registers. For instance the first float is located at address 7000/7001; the next float is located at address 7002/7003.

A double would be accessed by four 16-bit registers, so the first double 6000/6001/6002/6003 and the next double 6004/6005/6006/6007.

The data in the chapter 8.4 MODBUS MAPPING ASSIGNMENTS is printed as it should be addressed in **not-Modicon compatible mode**.

10.6.1 Floating point representation

The exponent is biased by 127.
The mantissa is 24 bits with the most significant bit 1 (not stored), 23 bit stored.

Sign + (Biased) Exponent	Exponent + Mantissa 3 (high)	Mantissa 2	Mantissa 1 (low)
SEEE EEEE	E MMM MMMM	MMMM MMMM	MMMM MMMM

10.6.2 Double representation

The exponent is biased by 127.
The mantissa is 53 bits with the most significant bit 1 (not stored), 52 bit stored.

Double precision bits

Sign + (Biased) Exponent	Exponent + Mantissa	Mantissa 6	Mantissa 5
SEEE EEEE	EEEE MMMM	MMMM MMMM	MMMM MMMM

Double precision bits 2

Mantissa 4	Mantissa 3	Mantissa 2	Mantissa 1
MMMM MMMM	MMMM MMMM	MMMM MMMM	MMMM MMMM

10.7 Transmit sequence of data types

Integers

Integers are transmitted and stored with the most significant part first.
Example:
Integer value 1790 decimal (6FE hexadecimal) is transmitted as:

First transmitted byte in data field	Second transmitted byte in data field
06	FE

Table 10-8: Example integer (16 bit)

Long integers

Long integers can be transmitted in two possible ways.
Example:
Long integer value 305419896 (12345678 hexadecimal).
The transmit order in both modes:

Example long integers

Normal mode	(1) 12_h	(2) 34_h	(3) 56_h	(4) 78_h
Reversed mode	(3) 56_h	(4) 78_h	(1) 12_h	(2) 34_h

Long long integers

Long long integers can be transmitted in two ways.
Example:
Long integer value 305419896 (12345678 hexadecimal).
The transmit order in both modes:

Example long long integer

Normal mode	(1) 12_h	(2) 34_h	(3) 56_h	(4) 78_h	(5) 0_h	(6) 0_h	(7) 0_h	(8) 0_h
Reversed mode	(3) 56_h	(4) 78_h	(1) 12_h	(2) 34_h	(7) 0_h	(8) 0_h	(5) 0_h	(6) 0_h

Floats

Floats can be transmitted in two ways.
Example:
The float number 4.125977 will give the IEEE representation.

Example IEEE

Sign	Exponent	Mantissa
0	1000 0001	(1) 000 0100 0000 1000 0000 0000

A biased exponent of 129 (81 hexadecimal) is exponent 2.
A positive sign
Mantissa = 4 + 1/8 + 1/1024. Note that the first bit is not stored!

The transmit order in both modes:

IEEE 754	(1) 40_h	(2) 84_h	(3) 08_h	(4) 00_h
Normal mode	(1) 40_h	(2) 84_h	(3) 08_h	(4) 00_h
Reversed mode	(3) 08_h	(4) 00_h	(1) 40_h	(2) 84_h

Doubles

Doubles can be transmitted in two ways.
Example:
The double number 4.125000001862645 will give the IEEE representation:

double number example

Sign	Exponent	Mantissa
0	100 0000 0001	(1)0000 1000 0000 0000 0000 0000 0000 0010 0000 0000 0000 0000 0000

A biased exponent of 1025 (401 hexadecimal) is exp. 2
A positive sign
Mantissa = 4 + 1/8 + 1/536870912. Note that the first bit is not stored!
The transmit order in both modes:

Doubles transmit order

IEEE 754	(1) 40_h	(2) 10_h	(3) 80_h	(4) 00_h	(5) 00_h	(6) 20_h	(7) 00_h	(8) 00_h
Normal mode	(1) 40_h	(2) 10_h	(3) 80_h	(4) 00_h	(5) 00_h	(6) 20_h	(7) 00_h	(8) 00_h
Reversed mode	(3) 80_h	(4) 00_h	(1) 40_h	(2) 10_h	(7) 00_h	(8) 00_h	(5) 00_h	(6) 20_h

String 8 will be transmitted as follows:
Example:
Text "Best UFM" (426573742055464D Hexadecimal)
The transmit order:

Normal mode	(1) 42_h	(2) 65_h	(3) 73_h	(4) 74_h	(5) 20_h	(6) 55_h	(7) 46_h	(8) $4D_h$

String 16 will be transmitted as follows:
Example:
Text "KROHNEAltosonic5" (4B524F484E45416C746F736F6E696335 Hexadecimal)
The transmit order:

Normal mode	(1) $4B_h$	(2) 52_h	(3) $4F_h$	(4) 48_h	(5) $4E_h$	(6) 45_h	(7) 41_h	(8) $6C_h$	(9) 74_h	(10) $6F_h$	(11) 73_h	(12) $6F_h$	(13) $6E_h$	(14) 69_h	(15) 63_h	(16) 35_h

10.8 Maximum requested points

The maximum points in a single request depend on the type of data.

Data type	Modicon compatible mode (count on 16 bit registers)	Not Modicon compatible mode (count on type)
Boolean	2000	2000
Integer	125	125
Long integer	124	62
Float	124	62
Double	124	31
ASCII	124	62 (8 characters) / 31 (16 characters)

How to set up a redundant system:
If one or more UFC systems are used with one host system, the host system must support Modbus master mode. The UFC will then operate in Modbus slave mode.

10.9 Set-up of the UFC modbus driver

10.9.1 Driver settings

The driver can be configured as follows:

- Modbus address (1...247)
- Modbus mode ASCII-mode and RTU mode
- Compatibility mode (modicon compatible or not)
- Byte order per variable type
- Baudrate
- Databits
- Stopbits
- Parity Even/Odd/No/mark or space
- Stop bits 1 or 2
- Timeouts
- Wired connection, 2wires or 3/4 Half and full duplex
- ASCII start code quantity of end chars, end code

10.9.2 Hardware set-up

To set-up the Modbus communication, first the hardware must be set-up.
The UFC is equipped with a RS485/RS422 Communication Card which provide 4 serial communication channels These channels are free for communication with host systems.

10.9.3 Software set-up

Now set-up the software, all the settings for the Modbus driver is done via the Configuration and monitoring tool. For more detailed information, refer to *MCD tool* on page 57.

First set the parameters for the communication line:

- 8.1.1.4: Set Modbus address for the first channel
- 8.1.1.5: Set to ASCII or RTU
- 8.1.1.6: Set to active or not, depending on your application compatibility with Modicon
- 8.1.1.8: Set the Baudrate
- 8.1.1.9: Set to 8 data bits
- 8.1.1.10: Set to 1 or 2 stop bits
- 8.1.1.11: Set parity to None, Even or Odd
- 8.1.1.20: for **RS485**, set to 2 wires; for **RS422**, set to 3/4 wires

The UFC-5 is not available as Master.

10.9.4 Possible problems

Specific RS485 checks:

- Are the jumpers installed to terminate the loop? (only if UFC-V is at the end of the line)
- Is the polarity correct? Are the lines swapped?

Other checks:

- Are the baudrate,number of stop bits and the parity set-up correctly?
- Are both systems in the same mode (ASCII / RTU)?
- Is the Modbus address Slave ID correct?
- RTU requires precise timing specifications, some of the RS485 -> RS232/422 converters perform data buffering that can give problems. Try ASCII mode if this happens.
- The Slave device will not give any response when it is addressed with a broadcast (SlaveID=0).

10.10 Modbus register mapping

Registers are mapped to specific address ranges according to both data and register type:

Data type	Register type	Read command(s)	Write command(s)	Address range
Integer (16 bit)	Input register	4	n.a.	3000..3499
	Holding register	3	6, 16	3500..3999
Long integer (32 bit)	Input register	4	n.a.	5000..5499
	Holding register	3	6, 16	5500..5999
Double (64 bit)	Input register	4	n.a.	6000..6499
	Holding register	3	6, 16	6500..6999
Float (32 bit)	Input register	4	n.a.	7000..7499
	Holding register	3	6, 16	7500..7999
Long long (64 bit)	Input register	4	n.a.	8000..8499
	Holding register	3	6, 16	8500..8999

INFORMATION!
The relative addresses listed in the tables below are addresses relative to the starting address of the designated register group.

10.10.1 Input Registers (read-only): Boolean; basic address 1000

Start address	Short description	Internal register name
1	Test register	t.b.d.
2	A: System set-up Alarm Reynolds Parameter Array (fail)	A Setup Reynolds
3	A: System set-up Alarm Viscosity Parameter Array (fail)	A Setup Viscosity
4	A: Down All Paths, no custody transfer standard (FAILED)	A Fail All Paths
5	A: Down Paths, Custody Transfer unreliable (FAILED)	A Fail Paths result unreliable
6	A: Low Reliability, Custody Transfer unreliable (FAILED)	A Low Acceptance
7	A: Out of range FLOW	A Out of Range Flow
8	A: Out of range REYNOLDS	A Out of Range Reynolds
9	A: Out of range PATH SUBSTITUTION	A Out of Range PathSubst
10	A: Out of range new Path substution profile	A Out of Range New PathSubst
11	A: Time calculation error	A Time calculation Error
12	A: Fail on a used input (T,P etc)	A Fail on used Input
13	A: Out of range Gain average	Gain average high
14	A: Out of range SNR	A SNR average low
15...16	Reserved	
17	A: Out of range: Temperature Body	A Temperature Body OOR
18	A: Override value used: Temperature Body	A Temperature Body OVR

Start address	Short description	Internal register name
19	A: Out of range: Temperature Line (if used internally)	A Temperature Line OOR
20	A: Override value used: Temperature Line (if used internally)	A Temperature Line OVR
21	A: Out of range: Temperature Sampler (if used internally)	A Temperature Sampler OOR
22	A: Override value used: Temperature Sampler (if used internally)	A Temperature Sampler OVR
23	A: Out of range: Pressure Line (if used internally)	A Pressure Line OOR
24	A: Override value used: Pressure Line (if used internally)	A Pressure Line OVR
25	A: Out of range: kinematic viscosity liquid/used (if used internally)	A Visco Kinematic OOR
26	A: Override value used: kinematic Viscosity (if used internally)	A Visco Kinematic OVR
27	A: Out of range: Dynamic viscosity (if used internally)	A Visco Dynamic OOR
28	A: Override value used: Dynamic Viscosity (if used internally)	A Visco Dynamic OVR
29	A: Out of range: Density (if used internally)	A Density OOR
30	A: Override value used: Density (if used internally)	A Density OVR
31...40	Reserved	
41	W: Down Paths, but Custody Transfer reliable	W Fail Paths but result Reliable
42	W: Fail Path Full Pipe detection	W Fail Path Fullpipe Detection
43	W: Low Acceptance	W Low Acceptance
44	W: Incoherence Fwd and Rev Velociy paths	W Incoherence Fwd and Rev Velocity
45	W: Instability flow	W Instability Flow
46	W: Instability SoS	W Instability SoS
47	W: Flow instability results in Reynolds Correction on Hold	W Instability Reynolds Correction Hold
48	W: Profile quality Swirl	W Profile quality Swirl
49	W: Profile quality Assymetry	W Profile quality Assymetry
50	W: Overrun System	W Overrun System
51	W: Gain average high	W Gain average high
52	W: SNR average low	W SNR average low
53...64	Reserved	
65	S: Flow direction	S Flow_Direction
66	S: measured Flow is below Low flow cut-off value	S LowFLowCutOff
67	S: Reset totals	S Reset_Totals
68	S: Reset Alarms	S Reset_Alarms
69	S: Reset Procestime	S Reset_ProcesTime
70	S: Reset Path Substitution	S Reset_Path Substitution
71	S: Initialisation after configuration setup change	S Initialisation
72	S: FWD Resetable Totalisers Rollover to zero	S FWD Resetable Totals Roll Zero
73	S: REV Resetable Totalisers Rollover to zero	S REV Resetable Totals Roll Zero
74	S: FWD Non Resetable Totalisers Rollover to zero	S FWD NonReset Totals Roll Zero

Start address	Short description	Internal register name
75	S: REV Non Resetable Totalisers Rollover to zero	S REV NonReset Totals Roll Zero
76...90	Reserved	
91	S: Out of range: Temperature Body (if also exported input)	S Temperature Body OOR
92	S: Override value used: Temperature Body (if also exported input)	S Temperature Body OVR
93	S: Out of range: Temperature Line (if exported input)	S Temperature Line OOR
94	S: Override value used: Temperature Line (if exported input)	S Temperature Line OVR
95	S: Out of range: Temperature Sampler (if exported input)	S Temperature Sampler OOR
96	S: Override value used: Temperature Sampler (if exported input)	S Temperature Sampler OVR
97	S: Out of range: Pressure Line (if exported input)	S Pressure Line OOR
98	S: Override value used: Pressure Line (if exported input)	S Pressure Line OVR
99	S: Out of range: kinematic viscosity liquid/used (if exported input)	S Visco Kinematic OOR
100	S: Override value used: kinematic Viscosity (if exported input)	S Visco Kinematic OVR
101	S: Out of range: Dynamic viscosity (if exported input)	S Visco Dynamic OOR
102	S: Override value used: Dynamic Viscosity (if exported input)	S Visco Dynamic OVR
103	S: Out of range: Density (if exported input)	S Density OOR
104	S: Override value used: Density (if exported input)	S Density OVR
105	S: Out of range: Spare1 (only exported input)	S Spare1 OOR
106	S: Override value used: Spare1 (only exported input)	S Spare1 OVR
107	S: Out of range: Spare2 (only exported input)	S Spare2 OOR
108	S: Override value used: Spare2 (only exported input)	S Spare2 OVR
109	S: Out of range: Spare3 (only exported input)	S Spare3 OOR
110	S: Override value used: Spare3 (only exported input)	S Spare3 OVR
111	S: Out of range: Spare4 (only exported input)	S Spare4 OOR
112	S: Override value used: Spare4 (only exported input)	S Spare4 OVR
113	S: Out of range: Spare5 (only exported input)	S Spare5 OOR
114	S: Override value used: Spare5 (only exported input)	S Spare5 OVR
115...130	Reserved	
131...138	S: Path Unreliable 1-8	Status Paths (array) 0...7
139...146	S: Path Down 1-8	Status Paths (array) 0...7
147...154	S: Path Down: Deviation SoS too large 1-8	Status Paths (array) 0...7
155...162	S: Path Down: Signal lost 1-8	Status Paths (array) 0...7
163...170	S: Path Gain Warning 1-8	Status Paths (array) 0...7

Start address	Short description	Internal register name
171...178	S: Path Gain Alarm 1-8	Status Paths (array) 0...7
179...186	S: Path SNR Warning 1-8	Status Paths (array) 0...7
187...194	S: Path SNR Alarm 1-8	Status Paths (array) 0...7

10.10.2 Input Registers (read-only): Integer (16-bit); basic address 3000

Start address	Short description	Default Unit	Internal Register Name
1	Test register		TestRegister uint16
2	Flow	[m^3/h]	Flow
3	Velocity	[m/s]	Velocity
4	SoS average	[m/s]	SoS average
5	Gain average	[dB]	Gain average
6	SN ratio average	[dB]	SNratio average
7	Reynolds indication by profile	[ ]	Reynolds By Profile
8	Reynolds indication by optional viscosity input	[ ]	Reynolds By ViscoInput
9	Kin. Viscosity indication by profile	[cSt]	ViscoKin By Profile
10	Kin Viscosity indication by optional viscosity input	[cSt]	ViscoKin By ViscoInput
11	Profile diagnostics Swirl %	[%]	Profile Swirl
12	Profile diagnostics Asymmetry %	[%]	Profile Assymetry
13	Profile N (CT) paths failing	[ ]	Profile Valid PathsFailed
14	Overall weighted reliability	[%]	Acceptance Flow
15	Sos band Max	[m/s]	SoS band Max
16	Sos band Min	[m/s]	SoS band Min
17	Gain band Max	[dB]	Gain band Max
18	Gain band Min	[dB]	Gain band Min
19	SN ratio band Max	[dB]	SNratio band Max
20	SN ratio band Min	[dB]	SNratio band Min
21	Correction factor KbT Thermal Body expansion	[ ]	Correction Kbt
22	Correction factor Kbp Pressure Body expansion	[ ]	Correction Kbp
23	Correction factor Kr, Reynolds	[ ]	Correction Kr
24	INPUT: Temperature Body	[°C]	Temperature Body
25	INPUT: Temperature Line	[°C]	Temperature Line
26	INPUT: Temperature Sampler	[°C]	Temperature Sampler
27	INPUT: Pressure Line	[barG]	Pressure Line
28	INPUT: Viscosity Kinematic	[cSt]	ViscosityKin
29	INPUT: Viscosity Dynamic	[cP]	ViscosityDyn
30	INPUT: Density	kg/m^3	Density

Start address	Short description	Default Unit	Internal Register Name
31	INPUT: Spare1 Input (export input only)	[ ]	Spare1
32	INPUT: Spare2 Input (export input only)	[ ]	Spare2
33	INPUT: Spare3 Input (export input only)	[ ]	Spare3
34	INPUT: Spare4 Input (export input only)	[ ]	Spare4
35	INPUT: Spare5 Input (export input only)	[ ]	Spare5
36	Number of Actual CT alarms	[ ]	N Actual Alarms
37	Number of Actual CT Warnings	[ ]	N Actual Warnings
38...45	RESERVED		
46...53	Path 1-8, velocity	[m/s]	Path Velocity
54...61	Path 1-8, SoS	[m/s]	Path SoS
62...69	Path 1-8, Gain	[dB]	Path Gain
70...77	Path 1-8, SNR	[dB]	Path SNRatio
78...85	Path 1-8, Acceptance	[%]	Path Acceptance
86...110	RESERVED		
111	Statistics: Flow average	[m^3/h]	AV Flow
112	Statistics: Flow running average	[m^3/h]	AV Tau Flow
113	Statistics: Flow standard deviation	[%]	SD Flow
114	Statistics: Flow running standard deviation	[%]	SD Tau Flow
115	Statistics: SoS average	[m/s]	AV SoS
116	Statistics: SoS standard deviation	[%]	SD SoS
117...124	Statistics: Path 1-8, velocity average	[m/s]	PATH AV Velocity
125...132	Statistics: Path 1-8, velocity standard deviation	[%]	PATH SD Velocity
133...140	Statistics: Path 1-8, SoS average	[m/s]	PATH AV SoS
141...148	Statistics: Path 1-8, SoS standard deviation	[%]	PATH SD SoS
149...156	Statistics: Path 1-8, Gain average	[dB]	PATH AV Gain
157...164	Statistics: Path 1-8, Gain standard deviation	[%]	PATH SD Gain
165...172	Statistics: Path 1-8, SNR average	[dB]	PATH AV SNratio
173...180	Statistics: Path 1-8, SNR standard deviation	[%]	PATH SD SNratio
181...188	Statistics: Path 1-8, Acceptance average	[%]	PATH AV Acceptance
189...196	Statistics: Path 1-8, Acceptance standard deviation	[%]	PATH SD Acceptance

INFORMATION!
Register reserved for testing communications and protocol handling with this type of register, without affecting the operation of the flowmeter.

10.10.3 Holding Registers (read/write): Integer (16-bit); basic address 3500

Start address	Short description	Internal Register Name
1	Test register	TestRegister uint16
2	Reset resetable Totalisers+alarms/warnings/status/procestime	Reset Totalisers
3	Reset alarms/warnings/status	Reset Alarms and Status
4...10	Reserved	
11	OVERRIDE Mode Temperature Body	Override Mode TempBody
12	OVERRIDE Mode Temperature Line	Override Mode TempLine
13	OVERRIDE Mode Temperature Sampler	Override Mode TempSamp
14	OVERRIDE Mode Pressure Line	Override Mode Presline
15	OVERRIDE Mode Viscosity Kinematic	Override Mode ViscoKin
16	OVERRIDE Mode Viscosity Dynamic	Override Mode ViscoDyn
17	OVERRIDE Mode Density	Override Mode Density
18	OVERRIDE Mode Spare1	Override Mode Spare1
19	OVERRIDE Mode Spare2	Override Mode Spare2
20	OVERRIDE Mode Spare3	Override Mode Spare3
21	OVERRIDE Mode Spare4	Override Mode Spare4
22	OVERRIDE Mode Spare5	Override Mode Spare5

INFORMATION!
Register reserved for testing communications and protocol handling with this type of register, without affecting the operation of the flowmeter.

10.10.4 Input Registers (read-only): Long integer (32-bit); basic address 4000

Start address	Short description	Default unit	Internal Register Name
1	Test register	-	TestRegister uint32
2	Reserved		
3	Reserved		
4	Reserved		
5...10	Reserved		
11	Resetable Totaliser RELIAB Gross Forward	[m3]	Total Reset FWD Reliab
12	Resetable Totaliser RELIAB Gross Reverse	[m3]	Total Reset REV Reliab
13	Resetable Totaliser FAIL Gross Forward	[m3]	Total Reset FWD Fail
14	Resetable Totaliser FAIL Gross Reverse	[m3]	Total Reset REV Fail

Start address	Short description	Default unit	Internal Register Name
15	Resetable Totaliser SUM Gross Forward	[m3]	Total Reset FWD Sum
16	Resetable Totaliser SUM Gross Reverse	[m3]	Total Reset REV Sum
17	NON-Resetable Totaliser RELIAB Gross Forward	[m3]	Total NonReset FWD Reliab
18	NON-Resetable Totaliser RELIAB Gross Reverse	[m3]	Total NonReset REV Reliab
19	NON-Resetable Totaliser FAIL Gross Forward	[m3]	Total NonReset FWD Fail
20	NON-Resetable Totaliser FAIL Gross Reverse	[m3]	Total NonReset REV Fail
21	NON-Resetable Totaliser SUM Gross Forward	[m3]	Total NonReset FWD Sum
22	NON-Resetable Totaliser SUM Gross Reverse	[m3]	Total NonReset REV Sum
23...50	Reserved		
51	A: System set-up Alarm Reynolds Parameter Array (fail)	[alarm]	Alarms Pipe
51	A: System set-up Alarm Viscosity Parameter Array (fail)	[alarm]	Alarms Pipe
51	A: Down All Paths, no custody transfer standard (FAILED)	[alarm]	Alarms Pipe
51	A: Down Paths, Custody Transfer unreliable (FAILED)	[alarm]	Alarms Pipe
51	A: Low Reliability, Custody Transfer unreliable (FAILED)	[alarm]	Alarms Pipe
51	A: Out of range FLOW	[alarm]	Alarms Pipe
51	A: Out of range REYNOLDS	[alarm]	Alarms Pipe
51	A: Out of range PATH SUBSTITUTION	[alarm]	Alarms Pipe
51	A: Out of range new Path substution profile	[alarm]	Alarms Pipe
51	A: Time calculation error	[alarm]	Alarms Pipe
51	A: Fail on a used input (T,P etc)	[alarm]	Alarms Pipe
51	A: Out of range Gain average	[alarm]	Alarms Pipe
51	A: Out of range SNR average	[alarm]	Alarms Pipe
52	A: Out of range: Temperature Body	[alarm]	Alarms Inputs
52	A: Override value used: Temperature Body	[alarm]	Alarms Inputs
52	A: Out of range: Temperature Line (if used internally)	[alarm]	Alarms Inputs
52	A: Override value used: Temperature Line (if used internally)	[alarm]	Alarms Inputs
52	A: Out of range: Temperature Sampler (if used internally)	[alarm]	Alarms Inputs
52	A: Override value used: Temperature Sampler (if used internally)	[alarm]	Alarms Inputs

Start address	Short description	Default unit	Internal Register Name
52	A: Out of range: Pressure Line (if used internally)	[alarm]	Alarms Inputs
52	A: Override value used: Pressure Line (if used internally)	[alarm]	Alarms Inputs
52	A: Out of range: kinematic viscosity liquid/used (if used internally)	[alarm]	Alarms Inputs
52	A: Override value used: kinematic Viscosity (if used internally)	[alarm]	Alarms Inputs
52	A: Out of range: Dynamic viscosity (if used internally)	[alarm]	Alarms Inputs
52	A: Override value used: Dynamic Viscosity (if used internally)	[alarm]	Alarms Inputs
52	A: Out of range: Density (if used internally)	[alarm]	Alarms Inputs
52	A: Override value used: Density (if used internally)	[alarm]	Alarms Inputs
53	W: Down Paths, but Custody Transfer reliable	[warning]	Warnings Pipe
53	W: Fail Path Full Pipe detection	[warning]	Warnings Pipe
53	W: Low Acceptance	[warning]	Warnings Pipe
53	W: Incoherence Fwd and Rev Velociy paths	[warning]	Warnings Pipe
53	W: Instability flow	[warning]	Warnings Pipe
53	W: Instability SoS	[warning]	Warnings Pipe
53	W: Flow instability results in Reynolds Correction on Hold	[warning]	Warnings Pipe
53	W: Profile quality Swirl	[warning]	Warnings Pipe
53	W: Profile quality Assymetry	[warning]	Warnings Pipe
53	W: Overrun System	[warning]	Warnings Pipe
53	W: Out of range Gain average	[warning]	Warnings Pipe
53	W: Out of range SNR average	[warning]	Warnings Pipe
54	S: Flow direction	[status]	Status Pipe
54	S: measured Flow is below Low flow cut-off value	[status]	Status Pipe
54	S: Reset totals	[status]	Status Pipe
54	S: Reset Alarms	[status]	Status Pipe
54	S: Reset Procestime	[status]	Status Pipe
54	S: Reset Path Substitution	[status]	Status Pipe
54	S: Initialisation after configuration setup change	[status]	Status Pipe
54	S: FWD Resetable Totalisers Rollover to zero	[status]	Status Pipe
54	S: REV Resetable Totalisers Rollover to zero	[status]	Status Pipe
54	S: FWD Non Resetable Totalisers Rollover to zero	[status]	Status Pipe
54	S: REV Non Resetable Totalisers Rollover to zero	[status]	Status Pipe

Start address	Short description	Default unit	Internal Register Name
55	S: Out of range: Temperature Body (if also exported input)	[status]	Status Inputs Exp
55	S: Override value used: Temperature Body (if also exported input)	[status]	Status Inputs Exp
55	S: Out of range: Temperature Line (if exported input)	[status]	Status Inputs Exp
55	S: Override value used: Temperature Line (if exported input)	[status]	Status Inputs Exp
55	S: Out of range: Temperature Sampler (if exported input)	[status]	Status Inputs Exp
55	S: Override value used: Temperature Sampler (if exported input)	[status]	Status Inputs Exp
55	S: Out of range: Pressure Line (if exported input)	[status]	Status Inputs Exp
55	S: Override value used: Pressure Line (if exported input)	[status]	Status Inputs Exp
55	S: Out of range: kinematic viscosity liquid/used (if exported input)	[status]	Status Inputs Exp
55	S: Override value used: kinematic Viscosity (if exported input)	[status]	Status Inputs Exp
55	S: Out of range: Dynamic viscosity (if exported input)	[status]	Status Inputs Exp
55	S: Override value used: Dynamic Viscosity(if exported input)	[status]	Status Inputs Exp
55	S: Out of range: Density (if exported input)	[status]	Status Inputs Exp
55	S: Override value used: Density (if exported input)	[status]	Status Inputs Exp
55	S: Out of range: Spare1 (only exported input)	[status]	Status Inputs Exp
55	S: Override value used: Spare1 (only exported input)	[status]	Status Inputs Exp
55	S: Out of range: Spare2 (only exported input)	[status]	Status Inputs Exp
55	S: Override value used: Spare2 (only exported input)	[status]	Status Inputs Exp
55	S: Out of range: Spare3 (only exported input)	[status]	Status Inputs Exp
55	S: Override value used: Spare3 (only exported input)	[status]	Status Inputs Exp
55	S: Out of range: Spare4 (only exported input)	[status]	Status Inputs Exp
55	S: Override value used: Spare4 (only exported input)	[status]	Status Inputs Exp
55	S: Out of range: Spare5 (only exported input)	[status]	Status Inputs Exp
55	S: Override value used: Spare5 (only exported input)	[status]	Status Inputs Exp
56	S: Path LowAcceptance 1	[status]	Status Paths (array) 0...7

Start address	Short description	Default unit	Internal Register Name
56	S: Path LowAcceptance 2	[status]	Status Paths (array) 0...7
56	S: Path LowAcceptance 3	[status]	Status Paths (array) 0...7
56	S: Path LowAcceptance 4	[status]	Status Paths (array) 0...7
56	S: Path LowAcceptance 5	[status]	Status Paths (array) 0...7
56	S: Path LowAcceptance 6	[status]	Status Paths (array) 0...7
56	S: Path LowAcceptance 7	[status]	Status Paths (array) 0...7
56	S: Path LowAcceptance 8	[status]	Status Paths (array) 0...7
57	S: Path Down 1	[status]	Status Paths (array) 0...7
57	S: Path Down 2	[status]	Status Paths (array) 0...7
57	S: Path Down 3	[status]	Status Paths (array) 0...7
57	S: Path Down 4	[status]	Status Paths (array) 0...7
57	S: Path Down 5	[status]	Status Paths (array) 0...7
57	S: Path Down 6	[status]	Status Paths (array) 0...7
57	S: Path Down 7	[status]	Status Paths (array) 0...7
57	S: Path Down 8	[status]	Status Paths (array) 0...7
58	S: Path SoS deviation to large 1	[status]	Status Paths (array) 0...7
58	S: Path SoS deviation to large 2	[status]	Status Paths (array) 0...7
58	S: Path SoS deviation to large 3	[status]	Status Paths (array) 0...7
58	S: Path SoS deviation to large 4	[status]	Status Paths (array) 0...7
58	S: Path SoS deviation to large 5	[status]	Status Paths (array) 0...7
58	S: Path SoS deviation to large 6	[status]	Status Paths (array) 0...7
58	S: Path SoS deviation to large 7	[status]	Status Paths (array) 0...7
58	S: Path SoS deviation to large 8	[status]	Status Paths (array) 0...7
59	S: Path Signal Lost 1	[status]	Status Paths (array) 0...7
59	S: Path Signal Lost 2	[status]	Status Paths (array) 0...7
59	S: Path Signal Lost 3	[status]	Status Paths (array) 0...7
59	S: Path Signal Lost 4	[status]	Status Paths (array) 0...7
59	S: Path Signal Lost 5	[status]	Status Paths (array) 0...7
59	S: Path Signal Lost 6	[status]	Status Paths (array) 0...7
59	S: Path Signal Lost 7	[status]	Status Paths (array) 0...7
59	S: Path Signal Lost 8	[status]	Status Paths (array) 0...7
60	S: Path Gain Warning 1	[status]	Status Paths (array) 0...7
60	S: Path Gain Warning 2	[status]	Status Paths (array) 0...7
60	S: Path Gain Warning 3	[status]	Status Paths (array) 0...7
60	S: Path Gain Warning 4	[status]	Status Paths (array) 0...7
60	S: Path Gain Warning 5	[status]	Status Paths (array) 0...7
60	S: Path Gain Warning 6	[status]	Status Paths (array) 0...7
60	S: Path Gain Warning 7	[status]	Status Paths (array) 0...7
60	S: Path Gain Warning 8	[status]	Status Paths (array) 0...7
61	S: Path Gain Alarm 1	[status]	Status Paths (array) 0...7
61	S: Path Gain Alarm 2	[status]	Status Paths (array) 0...7
61	S: Path Gain Alarm 3	[status]	Status Paths (array) 0...7

Start address	Short description	Default unit	Internal Register Name
61	S: Path Gain Alarm 4	[status]	Status Paths (array) 0...7
61	S: Path Gain Alarm 5	[status]	Status Paths (array) 0...7
61	S: Path Gain Alarm 6	[status]	Status Paths (array) 0...7
61	S: Path Gain Alarm 7	[status]	Status Paths (array) 0...7
61	S: Path Gain Alarm 8	[status]	Status Paths (array) 0...7
62	S: Path SNR Warning 1	[status]	Status Paths (array) 0...7
62	S: Path SNR Warning 2	[status]	Status Paths (array) 0...7
62	S: Path SNR Warning 3	[status]	Status Paths (array) 0...7
62	S: Path SNR Warning 4	[status]	Status Paths (array) 0...7
62	S: Path SNR Warning 5	[status]	Status Paths (array) 0...7
62	S: Path SNR Warning 6	[status]	Status Paths (array) 0...7
62	S: Path SNR Warning 7	[status]	Status Paths (array) 0...7
62	S: Path SNR Warning 8	[status]	Status Paths (array) 0...7
63	S: Path SNR Alarm 1	[status]	Status Paths (array) 0...7
63	S: Path SNR Alarm 2	[status]	Status Paths (array) 0...7
63	S: Path SNR Alarm 3	[status]	Status Paths (array) 0...7
63	S: Path SNR Alarm 4	[status]	Status Paths (array) 0...7
63	S: Path SNR Alarm 5	[status]	Status Paths (array) 0...7
63	S: Path SNR Alarm 6	[status]	Status Paths (array) 0...7
63	S: Path SNR Alarm 7	[status]	Status Paths (array) 0...7
63	S: Path SNR Alarm 8	[status]	Status Paths (array) 0...7

INFORMATION!
Register reserved for testing communications and protocol handling with this type of register, without affecting the operation of the flowmeter.

10.10.5 Input Registers (read-only): Double (64-bit floating point), basic address 5000

Start address NotModiconComp	Short description	Default unit	Internal Register Name
1	Test register	-	t.b.d.
2	Reserved		
3	Reserved		
4	Reserved		
5...10	Reserved		
11	Resetable Totaliser RELIAB Gross Forward	[ml]=[1E-6m3]	Total Reset FWD Reliab
12	Resetable Totaliser RELIAB Gross Reverse	[ml]=[1E-6m3]	Total Reset REV Reliab
13	Resetable Totaliser FAIL Gross Forward	[ml]=[1E-6m3]	Total Reset FWD Fail
14	Resetable Totaliser FAIL Gross Reverse	[ml]=[1E-6m3]	Total Reset REV Fail
15	Resetable Totaliser SUM Gross Forward	[ml]=[1E-6m3]	Total Reset FWD Sum

Start address NotModiconComp	Short description	Default unit	Internal Register Name
16	Resetable Totaliser SUM Gross Reverse	[ml]=[1E-6m3]	Total Reset REV Sum
17	NON-Resetable Totaliser RELIAB Gross Forward	[ml]=[1E-6m3]	Total NonReset FWD Reliab
18	NON-Resetable Totaliser RELIAB Gross Reverse	[ml]=[1E-6m3]	Total NonReset REV Reliab
19	NON-Resetable Totaliser FAIL Gross Forward	[ml]=[1E-6m3]	Total NonReset FWD Fail
20	NON-Resetable Totaliser FAIL Gross Reverse	[ml]=[1E-6m3]	Total NonReset REV Fail
21	NON-Resetable Totaliser SUM Gross Forward	[ml]=[1E-6m3]	Total NonReset FWD Sum
22	NON-Resetable Totaliser SUM Gross Reverse	[ml]=[1E-6m3]	Total NonReset REV Sum

INFORMATION!
Register reserved for testing communications and protocol handling with this type of register, without affecting the operation of the flowmeter.

10.10.6 Input Registers (read-only): Float (32-bit floating-point); basic address 7000

Start address NotModiconComp	Short description	Default unit	Internal Register Name
1	Test register	-	TestRegister float32
2	Flow	[m^3/h]	Flow
3	Velocity	[m/s]	Velocity
4	SoS average	[m/s]	SoS average
5	Gain average	[dB]	Gain average
6	SN ratio average	[dB]	SNratio average
7	Reynolds indication by profile	[ ]	Reynolds By Profile
8	Reynolds indication by optional viscosity input	[ ]	Reynolds By ViscoInput
9	Kin. viscosity indication by profile	[cSt]	ViscoKin By Profile
10	Kin. viscosity indication by optional viscosity input	[cSt]	ViscoKin By ViscoInput
11	Profile diagnostics swirl %	[%]	Profile Swirl
12	Profile diagnostics assymmetry %	[%]	Profile Assymetry
13	Profile N (CT) paths failing	[ ]	Profile Failed PathsWeighed
14	Overall weighted Acceptance	[%]	Acceptance Flow
15	SoS band Max	[m/s]	SoS band Max
16	SoS band Min	[m/s]	SoS band Min
17	Gain band Max	[dB]	Gain band Max
18	Gain band Min	[dB]	Gain band Min
19	SNratio band Max	[dB]	SNratio band Max
20	SNratio band Min	[dB]	SNratio band Min

Start address NotModiconComp	Short description	Default unit	Internal Register Name
21	Correction factor KbT Thermal Body expansion	[ ]	Correction Kbt
22	Correction factor Kbp Pressure Body Expansion	[ ]	Correction Kbp
23	Correction factor Kr, Reynolds	[ ]	Correction Kr
24	INPUT: Temperature Body	[ºC]	Temperature Body
25	INPUT: Temperature Line		Temperature Line
26	INPUT: Temperature Sampler		Temperature Sampler
27	INPUT: Pressure Line	[barG]	Pressure Line
28	INPUT: Viscosity Kinematic	[cSt]	ViscosityKin
29	INPUT: Viscosity Dynamic	[cSt]	ViscosityDyn
30	INPUT: Density	[kg/m^3]	Density
31	INPUT: Spare1 Input (export input only)	[ ]	Spare1
32	INPUT: Spare2 Input (export input only)	[ ]	Spare2
33	INPUT: Spare3 Input (export input only)	[ ]	Spare3
34	INPUT: Spare4 Input (export input only)	[ ]	Spare4
35	INPUT: Spare5 Input (export input only)	[ ]	Spare5
36	Number of Actual CT alarms	[ ]	N Actual Alarms
37	Number of Actual CT Warnings	[ ]	N Actual Warnings
38...45	RESERVED		
46...53	Path 1-8, velocity	[m/s]	Path Velocity
54...61	Path 1-8, SoS	[m/s]	Path SoS
62...69	Path 1-8, Gain	[dB]	Path Gain
70...77	Path 1-8,SNR	[dB]	Path SNratio
78...85	Path 1-8, Acceptance	[%]	Path Acceptance
86...110	RESERVED		
111	Statistics: Flow average	[m^3/h]	AV Flow
112	Statistics: Flow running average	[m^3/h]	AV Tau Flow
113	Statistics: Flow standard deviation	[%]	SD Flow
114	Statistics: Flow running standard deviation	[%]	SD Tau Flow
115	Statistics: SoS average	[m/s]	AV SoS
116	Statistics: SoS standard deviation	[%]	SD SoS
117...124	Statistics: Path 1-8, velocity average	[m/s]	PATH AV Velocity
125...132	Statistics: Path 1-8, velocity standard deviation	[%]	PATH SD Velocity
133...140	Statistics: Path 1-8, SoS average	[m/s]	PATH AV SoS

Start address NotModiconComp	Short description	Default unit	Internal Register Name
141...148	Statistics: Path 1-8, SoS standard deviation	[%]	PATH SD SoS
149...156	Statistics: Path 1-8, Gain average	[dB]	PATH AV Gain
157...164	Statistics: Path 1-8, Gain standard deviation	[%]	PATH SD Gain
165...172	Statistics: Path 1-8, SNR average	[dB]	PATH AV SNratio
173...180	Statistics: Path 1-8, SNR standard deviation	[%]	PATH SD SNratio
181...188	Statistics: Path 1-8, Acceptance average	[%]	PATH AV Acceptance
189...196	Statistics: Path 1-8, Acceptance standard deviation	[%]	PATH SD Acceptance

INFORMATION!
Register reserved for testing communications and protocol handling with this type of register, without affecting the operation of the flowmeter.

10.10.7 Holding Registers (read/write): Float (32-bit) floating-point; basic address 8000

Start address NotModiconComp	Short description	Default unit	Internal Register Name
1	Test register	[ ]	t.b.d.
2	Meter Constant forward	[ ]	Remote MC Fwd
3	Meter Constant reverse	[ ]	Remote MC Rev
4...10	RESERVED		
11	Modbus Input Temperature Body	[°C]	A:/IO/Inputs/Link for measured value/Temperature Body
12	Modbus Input Temperature Line	[°C]	A:/IO/Inputs/Link for measured value/Temperature Line
13	Modbus Input Temperature Sampler	[°C]	A:/IO/Inputs/Link for measured value/Temperature Sampler
14	Modbus Input Pressure Line	[barG]	A:/IO/Inputs/Link for measured value/Pressure Line
15	Modbus Input Viscosity Kinematic	[cSt]	A:/IO/Inputs/Link for measured value/ViscosityKin
16	Modbus Input Viscosity Dynamic	[cSt]	A:/IO/Inputs/Link for measured value/ViscosityDyn
17	Modbus Input Density		A:/IO/Inputs/Link for measured value/Density
18	Modbus Input Spare1	[ ]	A:/IO/Inputs/Link for measured value/Spare1
19	Modbus Input Spare2	[ ]	A:/IO/Inputs/Link for measured value/Spare2
20	Modbus Input Spare3	[ ]	A:/IO/Inputs/Link for measured value/Spare3

Start address NotModiconComp	Short description	Default unit	Internal Register Name
21	Modbus Input Spare4	[ ]	A:/IO/Inputs/Link for measured value/Spare4
22	Modbus Input Spare5	[ ]	A:/IO/Inputs/Link for measured value/Spare5
23	OVERRIDE Temperature Body	[°C]	Override Value TempBody
24	OVERRIDE Temperature Line	[°C]	Override Value TempLine
25	OVERRIDE Temperature Sampler	[°C]	Override Static TempSamp
26	OVERRIDE Pressure Line	[barG]	Override Value Presline
27	OVERRIDE Viscosity Kinematic	[cSt]	Override Value ViscoKin
28	OVERRIDE Viscosity Dynamic	[cP]	Override Value ViscoDyn
29	OVERRIDE Density	[kg/m^3]	Override Value Density
30	OVERRIDE Spare1	[ ]	Override Spare1
31	OVERRIDE Spare2	[ ]	Override Spare2
32	OVERRIDE Spare3	[ ]	Override Spare3
33	OVERRIDE Spare4	[ ]	Override Spare4
34	OVERRIDE Spare5	[ ]	Override Spare5

10.10.8 Input Registers (read-only): Long long (64-bit integer); basic address range 9000

Start address NotModiconComp	Short description	Default unit	Internal Register Name
1	Test register		TestRegister uint64
2	Resetable Totaliser RELIAB Gross Forward	m^3	Gross_Fwd_RELIAB
3	Resetable Totaliser RELIAB Gross Reverse	m^3	Gross_Rev_RELIAB
4	Resetable Totaliser FAIL Gross Forward	m^3	Gross_Fwd_FAIL
5	Resetable Totaliser FAIL Gross Reverse	m^3	Gross_Rev_FAIL
6	Resetable Totaliser SUM Gross Forward	m^3	Gross_Fwd_SUM
7	Resetable Totaliser SUM Gross Reverse	m^3	Gross_Rev_SUM
8	NON-Resetable Totaliser RELIAB Gross Forward	m^3	GrossNR_Fwd_RELIAB
9	NON-Resetable Totaliser RELIAB Gross Reverse	m^3	GrossNR_Rev_RELIAB
10	NON-Resetable Totaliser FAIL Gross Forward	m^3	GrossNR_Fwd_FAIL
11	NON-Resetable Totaliser FAIL Gross Reverse	m^3	GrossNR_Rev_FAIL
12	NON-Resetable Totaliser SUM Gross Forward	m^3	GrossNR_Fwd_SUM
13	NON-Resetable Totaliser SUM Gross Reverse	m^3	GrossNR_Rev_SUM

INFORMATION!
Register reserved for testing communications and protocol handling with this type of register, without affecting the operation of the flowmeter.

10.10.9 Input Registers (read only): String (16 character); basic address 14000

Start address NotModiconComp	Short description	Unit	Internal Register Name
1	CRC checksum Custody transfer parameters	text 16 ch	t.b.d.
2	CRC checksum Custody transfer Application parameters	text 16 ch	t.b.d.
3	CRC checksum Custody transfer Software engine	text 16 ch	t.b.d.
4	Flow meter Type	text 32 ch	t.b.d.
5	Serial number	text 32 ch	t.b.d.
6	Project number/name	text 64 ch	t.b.d.
7	Tagnumber	text 32 ch	t.b.d.
8	Pipe size	text 64 ch	t.b.d.
9	Customer	text 40 ch	t.b.d.
10	Location	text 40 ch	t.b.d.
11	Station	text 40 ch	t.b.d.

10.11 Modbus mapping assignments

The available data is grouped in four levels:

1. Primary data
2. Reserved
3. Reserved
4. Reserved
5. Data for analysis
6. Control data
7. User settings
8. Reserved
9. Data not used

The data is grouped by data type.

10.12 CRC codes

Appendix A: Time out values
The character length lies between 9 and 12 bits.
The UFP-5 determines the time between two bytes to recognise a communication failure or the end of a message. UFP-5 discriminates between a timeout between 2 bytes and a timeout after the last byte, which occurs at the end of a message.
The time between two bytes is measured with a resolution of ±100 µs.
To detect the timeout state (end of message) a timer is incremented every millisecond. A

received byte will reset the timer. Every millisecond the timer value will be checked for a timeout value, when it will exceed a defined value it will mark the last received byte as end of message. Notice that the serial communication is a asynchrony process with respect to the used timer interrupt, therefore a 'jitter' of 1 ms must be taken into account.

Modbus defined timeout values for every baud rate with N number of bytes:

Baud rate	9 bit		10 bit		11 bit		12 bit	
Timeout chars	3.5	4.0	3.5	4.0	3.5	4.0	3.5	4.0
1200	26.25 ms	30 ms	29.17 ms	33.34 ms	32.08 ms	36.67 ms	35.00 ms	40 ms
2400	13.16 ms	15 ms	14.58 ms	6.67 ms	16.04 ms	18.33 ms	17.50 ms	20 ms
4800	6.56 ms	7.5 ms	7.29 ms	8.33 ms	8.02 ms	9.17 ms	8.75 ms	10 ms
9600	3.28 ms	3.75 ms	3.65 ms	4.16 ms	4.01 ms	4.58 ms	4.38 ms	5 ms
19200	1.64 ms	1.88 ms	1.82 ms	2.08 ms	2.01 ms	2.29 ms	2.19 ms	2.5 ms

The maximum time to detect a timeout (end of message) used in UFP 5:

Baud rate	9	10	11	12
1200	28...29 ms	31...32 ms	33...34 ms	36...37 ms
2400	14...15 ms	15...16 ms	16...17 ms	18...19 ms
4800	6...7 ms	7...8 ms	8...9 ms	9...10 ms
9600	3...4 ms	3...4 ms	4...5 ms	4...5 ms
19200	2...3 ms	2...3 ms	2...3 ms	2...3 ms

The maximum time between 2 characters in a message (GAP) used in UFP 5:

Baud rate	9	10	11	12
1200	28.2 ms	31.3 ms	34.4 ms	37.5 ms
2400	14.1 ms	15.6 ms	1.27 ms	8.8 ms
4800	7.0 ms	7.8 ms	8.6 ms	9.4 ms
9600	3.5 ms	3.9 ms	4.3 ms	4.7 ms
19200	1.8 ms	1.95 ms	2.2 ms	2.4 ms

Appendix B: LRC Generation
(as taken from the website: www.modicon.com/techpubs/crc7.html)
The Longitudinal Redundancy Check (LRC) field is one byte, containing an eight-bit binary value. The LRC value is calculated by the transmitting device, which appends the LRC to the message. The receiving device recalculates an LRC during receipt of the message, and compares the calculated value to the actual value it received in the LRC field. If the two values are not equal, an error results.
The LRC is calculated by adding together successive eight-bit bytes in the message, discarding any carries, then two's complementing the result. The LRC is an eight-bit field, therefore each new addition of a character that would result in a value higher than 255 decimal simply rolls over the field's value through zero. Because there is no ninth bit, the carry is discarded automatically.
Generating an LRC
Step 1:
Add all bytes in the message, excluding the starting colon and ending CRLF. Add them into an eight-bit field, so that carries will be discarded.

Step 2:
Subtract the final field value from FF hex (all 1's), to produce the ones-complement.
Step 3:
Add 1 to produce the two's-complement.
Put the LRC into the Message Pl
When the eight-bit LRC (two ASCII characters) is transmitted in the message, the high order character will be transmitted first, followed by the low order character, e.g. if the LRC value is 61 hex (0110 0001):

Figure 8 LRC Character Sequence

Colon	Addr.	Fct.	Data Count	Data	Data	Data	Data	LRC Hi	LRC Lo	CR	LF
										6	1

Example
An example of a C language function performing LRC generation is shown below.
The function takes two arguments:
unsigned char *auchMsg ; A pointer to the message buffer containing binary data to be used for generating the LRC
unsigned short usDataLen ; The quantity of bytes in the message buffer. The function returns the LRC as a type unsigned char.
LRC Generation Function

```
static unsigned char LRC(auchMsg, usDataLen)
unsigned char *auchMsg ; /* message to calculate */
unsigned short usDataLen ; /* LRC upon quantity of */
/* bytes in message */
{
unsigned char uchLRC = 0 ; /* LRC char initialized */
while (usDataLen--) /* pass through message */
uchLRC += *auchMsg++ ; /* buffer add buffer byte*/
/* without carry */
return ((unsigned char)(-((char_uchLRC))) ;
 /* return twos complemen */
}
```

Appendix C: CRC generation
(As taken from the website: www.modicon.com/techpubs/crc7.html)
The Cyclical Redundancy Check (CRC) field is two bytes, containing a 16-bit binary value. The CRC value is calculated by the transmitting device, which appends the CRC to the message. The receiving device recalculates a CRC during receipt of the message, and compares the calculated value to the actual value it received in the CRC field. If the two values are not equal, an error results.
The CRC is started by first preloading a 16-bit register to all 1's. Then a process begins of applying successive eight-bit bytes of the message to the current contents of the register. Only the eight bits of data in each character are used for generating the CRC. Start and stop bits, and the parity bit, do not apply to the CRC.
During generation of the CRC, each eight-bit character is exclusive ORed with the register contents. The result is shifted in the direction of the least significant bit (LSB), with a zero filled into the most significant bit (MSB) position. The LSB is extracted and examined. If the LSB was a 1, the register is then exclusive ORed with a preset, fixed value. If the LSB was a 0, no exclusive OR takes place.
This process is repeated until eight shifts have been performed. After the last (eighth) shift, the next eight-bit character is exclusive ORed with the register's current value, and the process repeats for eight more shifts as described above. The final contents of the register, after all the characters of the message have been applied, is the CRC value.

Generating a CRC
Step 1
Load a 16-bit register with FFFF hex (all 1's). Call this the CRC register.
Step 2
Exclusive OR the first eight-bit byte of the message with the low order byte of the 16-bit CRC register, putting the result in the CRC register.
Step 3
Shift the CRC register one bit to the right (toward the LSB), zerofilling the MSB. Extract and examine the LSB.
Step 4
If the LSB is 0, repeat Step 3 (another shift). If the LSB is 1, Exclusive OR the CRC register with the polynomial value A001 hex (1010 0000 0000 0001).
Step 5
Repeat Steps 3 and 4 until eight shifts have been performed. When this is done, a complete eight-bit byte will have been processed.
Step 6
Repeat Steps 2 ... 5 for the next eight-bit byte of the message. Continue doing this until all bytes have been processed.
Result
The final contents of the CRC register is the CRC value.
Step 7
When the CRC is placed into the message, its upper and lower bytes must be swapped as described below.
Put the CRC into the Message
When the 16-bit CRC (two eight-bit bytes) is transmitted in the message, the low order byte will be transmitted first, followed by the high order byte, e.g. if the CRC value is 1241 hex (0001 0010 0100 0001):

Figure 9 CRC Byte Sequence

Addr.	Fct.	Data Count	Data	Data	Data	Data	CRC Lo	CRC Hi
							41	12

Example
An example of a C language function performing CRC generation is shown on the following pages. All of the possible CRC values are preloaded into two arrays, which are simply indexed as the function increments through the message buffer. One array contains all of the 256 possible CRC values for the high byte of the 16-bit CRC field, and the other array contains all of the values for the low byte.
Indexing the CRC in this way provides faster execution than would be achieved by calculating a new CRC value with each new character from the message buffer.
Note: This function does the swapping of the high/low CRC bytes internally. The bytes are already swapped in the CRC value that is returned from the function. Therefore the CRC value returned from the function can be directly placed into the message for transmission.
The function takes two arguments:
unsigned char *puchMsg ; A pointer to the message buffer containing binary data to be used for generating the CRC
unsigned short usDataLen ; The quantity of bytes in the message buffer.
The function returns the CRC as a type unsigned short.
CRC Generation Function

```
unsigned short CRC16(puchMsg, usDataLen)
unsigned char *puchMsg ; /* message to calculate CRC upon */
unsigned short usDataLen ; /* quantity of bytes in message */
{
```

```
unsigned char uchCRCHi = 0xFF ; /* high CRC byte initialized */
unsigned char uchCRCLo = 0xFF ; /* low CRC byte initialized */
unsigned uIndex ; /* will index into CRC lookup table */
while (usDataLen--) /* pass through message buffer */
 {
uIndex = uchCRCHi ^ *puchMsg++ ; /* calculate the CRC */
uchCRCHi = uchCRCLo ^ auchCRCHi[uIndex] ;
uchCRCLo = auchCRCLo[uIndex] ;
}
return (uchCRCHi << 8 | uchCRCLo) ;
}
```

High Order Byte Table

```
/* Table of CRC values for high-order byte */
static unsigned char auchCRCHi[] = {
0x00, 0xC1, 0x81, 0x40, 0x01, 0xC0, 0x80, 0x41, 0x01, 0xC0,
0x80, 0x41, 0x00, 0xC1, 0x81, 0x40, 0x01, 0xC0, 0x80, 0x41,
0x00, 0xC1, 0x81, 0x40, 0x00, 0xC1, 0x81, 0x40, 0x01, 0xC0,
0x80, 0x41, 0x01, 0xC0, 0x80, 0x41, 0x00, 0xC1, 0x81, 0x40,
0x00, 0xC1, 0x81, 0x40, 0x01, 0xC0, 0x80, 0x41, 0x00, 0xC1,
0x81, 0x40, 0x01, 0xC0, 0x80, 0x41, 0x01, 0xC0, 0x80, 0x41,
0x00, 0xC1, 0x81, 0x40, 0x01, 0xC0, 0x80, 0x41, 0x00, 0xC1,
0x81, 0x40, 0x00, 0xC1, 0x81, 0x40, 0x01, 0xC0, 0x80, 0x41,
0x00, 0xC1, 0x81, 0x40, 0x01, 0xC0, 0x80, 0x41, 0x01, 0xC0,
0x80, 0x41, 0x00, 0xC1, 0x81, 0x40, 0x00, 0xC1, 0x81, 0x40,
0x01, 0xC0, 0x80, 0x41, 0x01, 0xC0, 0x80, 0x41, 0x00, 0xC1,
0x81, 0x40, 0x01, 0xC0, 0x80, 0x41, 0x00, 0xC1, 0x81, 0x40,
0x00, 0xC1, 0x81, 0x40, 0x01, 0xC0, 0x80, 0x41, 0x01, 0xC0,
0x80, 0x41, 0x00, 0xC1, 0x81, 0x40, 0x00, 0xC1, 0x81, 0x40,
0x01, 0xC0, 0x80, 0x41, 0x00, 0xC1, 0x81, 0x40, 0x01, 0xC0,
0x80, 0x41, 0x01, 0xC0, 0x80, 0x41, 0x00, 0xC1, 0x81, 0x40,
0x00, 0xC1, 0x81, 0x40, 0x01, 0xC0, 0x80, 0x41, 0x01, 0xC0,
0x80, 0x41, 0x00, 0xC1, 0x81, 0x40, 0x01, 0xC0, 0x80, 0x41,
0x00, 0xC1, 0x81, 0x40, 0x00, 0xC1, 0x81, 0x40, 0x01, 0xC0,
0x80, 0x41, 0x00, 0xC1, 0x81, 0x40, 0x01, 0xC0, 0x80, 0x41,
0x01, 0xC0, 0x80, 0x41, 0x00, 0xC1, 0x81, 0x40, 0x01, 0xC0,
0x80, 0x41, 0x00, 0xC1, 0x81, 0x40, 0x00, 0xC1, 0x81, 0x40,
0x01, 0xC0, 0x80, 0x41, 0x01, 0xC0, 0x80, 0x41, 0x00, 0xC1,
0x81, 0x40, 0x00, 0xC1, 0x81, 0x40, 0x01, 0xC0, 0x80, 0x41,
0x00, 0xC1, 0x81, 0x40, 0x01, 0xC0, 0x80, 0x41, 0x01, 0xC0,
0x80, 0x41, 0x00, 0xC1, 0x81, 0x40
} ;
```

Low Order Byte Table

```
/* Table of CRC values for low-order byte */
static char auchCRCLo[] = {
0x00, 0xC0, 0xC1, 0x01, 0xC3, 0x03, 0x02, 0xC2, 0xC6, 0x06,
0x07, 0xC7, 0x05, 0xC5, 0xC4, 0x04, 0xCC, 0x0C, 0x0D, 0xCD,
0x0F, 0xCF, 0xCE, 0x0E, 0x0A, 0xCA, 0xCB, 0x0B, 0xC9, 0x09,
0x08, 0xC8, 0xD8, 0x18, 0x19, 0xD9, 0x1B, 0xDB, 0xDA, 0x1A,
0x1E, 0xDE, 0xDF, 0x1F, 0xDD, 0x1D, 0x1C, 0xDC, 0x14, 0xD4,
0xD5, 0x15, 0xD7, 0x17, 0x16, 0xD6, 0xD2, 0x12, 0x13, 0xD3,
0x11, 0xD1, 0xD0, 0x10, 0xF0, 0x30, 0x31, 0xF1, 0x33, 0xF3,
0xF2, 0x32, 0x36, 0xF6, 0xF7, 0x37, 0xF5, 0x35, 0x34, 0xF4,
0x3C, 0xFC, 0xFD, 0x3D, 0xFF, 0x3F, 0x3E, 0xFE, 0xFA, 0x3A,
0x3B, 0xFB, 0x39, 0xF9, 0xF8, 0x38, 0x28, 0xE8, 0xE9, 0x29,
0xEB, 0x2B, 0x2A, 0xEA, 0xEE, 0x2E, 0x2F, 0xEF, 0x2D, 0xED,
```

```
0xEC, 0x2C, 0xE4, 0x24, 0x25, 0xE5, 0x27, 0xE7, 0xE6, 0x26,
0x22, 0xE2, 0xE3, 0x23, 0xE1, 0x21, 0x20, 0xE0, 0xA0, 0x60,
0x61, 0xA1, 0x63, 0xA3, 0xA2, 0x62, 0x66, 0xA6, 0xA7, 0x67,
0xA5, 0x65, 0x64, 0xA4, 0x6C, 0xAC, 0xAD, 0x6D, 0xAF, 0x6F,
0x6E, 0xAE, 0xAA, 0x6A, 0x6B, 0xAB, 0x69, 0xA9, 0xA8, 0x68,
0x78, 0xB8, 0xB9, 0x79, 0xBB, 0x7B, 0x7A, 0xBA, 0xBE, 0x7E,
0x7F, 0xBF, 0x7D, 0xBD, 0xBC, 0x7C, 0xB4, 0x74, 0x75, 0xB5,
0x77, 0xB7, 0xB6, 0x76, 0x72, 0xB2, 0xB3, 0x73, 0xB1, 0x71,
0x70, 0xB0, 0x50, 0x90, 0x91, 0x51, 0x93, 0x53, 0x52, 0x92,
0x96, 0x56, 0x57, 0x97, 0x55, 0x95, 0x94, 0x54, 0x9C, 0x5C,
0x5D, 0x9D, 0x5F, 0x9F, 0x9E, 0x5E, 0x5A, 0x9A, 0x9B, 0x5B,
0x99, 0x59, 0x58, 0x98, 0x88, 0x48, 0x49, 0x89, 0x4B, 0x8B,
0x8A, 0x4A, 0x4E, 0x8E, 0x8F, 0x4F, 0x8D, 0x4D, 0x4C, 0x8C,
0x44, 0x84, 0x85, 0x45, 0x87, 0x47, 0x46, 0x86, 0x82, 0x42,
0x43, 0x83, 0x41, 0x81, 0x80, 0x40
} ;
```

KROHNE – Process instrumentation and measurement solutions

- Flow
- Level
- Temperature
- Pressure
- Process Analysis
- Services

Head Office KROHNE Messtechnik GmbH
Ludwig-Krohne-Str. 5
47058 Duisburg (Germany)
Tel.: +49 203 301 0
Fax: +49 203 301 10389
info@krohne.com

The current list of all KROHNE contacts and addresses can be found at:
www.krohne.com