MFC 400 Technical Datasheet

Signal converter for mass flowmeters

- High performance signal converter for all applications
- Stable in multi-phase applications due to Entrained Gas Management (EGM®)
- High developed diagnostic functions acc. to NAMUR NE 107

The documentation is only complete when used in combination with the relevant documentation for the flow sensor.

© KROHNE 06/2015 - 4002075704 - TD MFC 400 R04 en

1 Product features 3

1.1 The high performance signal converter for all applications ... 3
1.2 Options and variants ... 5
1.3 Signal converter/flow sensor combination possibilities ... 6
1.4 Measuring principle ... 6

2 Technical data 7

2.1 Technical data ... 7
2.2 Dimensions and weights ... 18
2.2.1 Housing ... 18
2.2.2 Mounting plate, field housing ... 18

3 Installation 19

3.1 Intended use ... 19
3.2 Installation specifications ... 19
3.3 Mounting of the compact version ... 19
3.4 Mounting the field housing, remote version ... 20
3.4.1 Pipe mounting ... 20
3.4.2 Wall mounting ... 21

4 Electrical connections 22

4.1 Safety instructions ... 22
4.2 Connection diagram ... 22
4.3 Grounding the flow sensor ... 23
4.4 Connecting power – all housing variants ... 24
4.5 Inputs and outputs, overview ... 25
4.5.1 Combinations of the inputs/outputs (I/Os) ... 25
4.5.2 Description of the CG number ... 26
4.5.3 Fixed, non-alterable input/output versions ... 27
4.5.4 Alterable input/output versions ... 29

5 Notes 30

1.1 The high performance signal converter for all applications

The **MFC 400** Coriolis mass flow signal converter will provide the highest performance possible across a wide range of applications. For the measurement of liquids or gases, cryogenic to high temperature fluids, single or multi-phase fluids and advanced digital signal processing techniques is used to give stable and accurate measurements of mass flow, density and temperature.

Conforming to the NAMUR standard NE 107 for status and error handling, the MFC 400 features enhanced meter diagnostics. This provides extensive self-checking of internal circuits and information regarding the health of the measuring sensor, but just as importantly, vital information about the process and process conditions.

(signal converter in field housing)

① Communication with any third party system possible via Foundation Fieldbus, Profibus PA/DP or Modbus
② Intuitive navigation and a wide variety of languages integrated as standard for ease of operation
③ Supply voltage: 100...230 VAC (standard) and 24 VDC or 24 VAC/DC (optional)

Highlights

- High performance signal converter with multiple output options
- Advanced diagnostic functions acc. to NE 107
- With Entrained Gas Management (EGM^{TM}) – the new standard for entrained gas immunity
- Excellent long-term stability
- Easy to install and program due to improved user interface
- Optical and mechanical keys for ease of use
- Redundant data storage in signal converter housing
- Real time clock for logging events
- HART® 7

Industries

- Water & Wastewater
- Chemicals
- Power plants
- Food & Beverage
- Machinery
- Oil & Gas
- Petrochemical
- Pulp & Paper
- Pharmaceutical
- Marine

Applications

- Liquids and gases
- Liquids with gas entrainment
- Slurries and viscous products
- Concentration measurement for quality control
- Measurement of volume flow
- Measurement of density and reference density
- Custody transfer loading/unloading
- Custody transfer measurements

1.2 Options and variants

Compact design for standard applications

(Example: OPTIMASS 6400 – compact)

(Example: OPTIMASS 2400 – compact)

The MFC 400 mass flow signal converter is available in different variants and offers superior performance in any conceivable application. From process control in chemistry, to density and concentration measurements in the food and beverage industry, to custody transfer filling and transport measurements for oil and gas right down to conveyor systems in the pulp and paper industry.

Coriolis mass flow measuring systems measure the mass and volume flow, the density and the temperature of liquids and gases. In addition, the concentration in mixtures and slurries can also be determined.

Thanks to Entrained Gas Management (EGM^{TM}) the MFC 400 systems offer high performance with air entrainment, delivering continuous measurement even with 0...100% gas entrainment.

For standard applications the compact housing is mounted directly on the measuring sensor. In the unlikely event of a failure, the electronics can be easily exchanged and reconfigured using a backup data set that is stored in the housing.

Remote field housing version

(signal converter in field housing)

The signal converter in the robust field housing is generally used when it is difficult to access the measuring point or when ambient conditions do not allow the use of the compact version.

1.3 Signal converter/flow sensor combination possibilities

Flow sensor	Flow sensor + signal converter MFC 400	
	Compact	Remote field housing
OPTIMASS 1000	OPTIMASS 1400 C	OPTIMASS 1400 F
OPTIMASS 2000	OPTIMASS 2400 C	OPTIMASS 2400 F
OPTIMASS 3000	OPTIMASS 3400 C	OPTIMASS 3400 F
OPTIMASS 6000	OPTIMASS 6400 C	OPTIMASS 6400 F
OPTIMASS 7000	OPTIMASS 7400 C	OPTIMASS 7400 F

1.4 Measuring principle

The signal converter has been designed to work with all the measuring tube designs used in the mass flowmeters. For information regarding the measuring principle for a specific measuring tube design, please refer to the technical documentation of the relevant flow sensor.

2.1 Technical data

- *The following data is provided for general applications. If you require data that is more relevant to your specific application, please contact us or your local sales office.*
- *Additional information (certificates, special tools, software,...) and complete product documentation can be downloaded free of charge from the website (Downloadcenter).*

Measuring system

Measuring principle	Coriolis principle
Application range	Measurement of mass flow, density, temperature, volume flow, flow velocity, concentration

Design

Modular construction	The measuring system consists of a flow sensor and a signal converter.
Flow sensor	
OPTIMASS 1000	DN15…50 / ½…2"
OPTIMASS 2000	DN100…250 / 4...10"
OPTIMASS 3000	DN01…04 / 1/25...4/25"
OPTIMASS 6000	DN08…250 / 3/8...10"
OPTIMASS 7000	DN06…80 / ¼…3"
	All flow sensors are also available in an Ex version.
Signal converter	
Compact version (C)	OPTIMASS x400 C (x = 1, 2, 3, 6 or 7)
Field housing (F) - remote version	MFC 400 F
	Compact and field housing versions are also available in an Ex version.
Options	
Outputs / inputs	Current output (incl. HART®), pulse output, frequency output, and/or status output, limit switch and/or control input (depending on the I/O version)
Totaliser	2 (optional 3) internal totalisers with a max. of 8 counter places (e.g. for counting volume and/or mass units)
Verification	Integrated verification, diagnostic functions: measuring device, process, measured value, stabilisation
Concentration measurement	Universal concentration measurement, °Brix, °Baume, °Plato, alcohol concentration, NaOH and API density
Communication interfaces	Foundation Fieldbus, Profibus PA and DP, Modbus, HART®

Display and user interface	
Graphic display	LC display, backlit white.
	Size: 128 x 64 pixels, corresponds to 59 x 31 mm = 2.32" x 1.22"
	Display turnable in 90° steps.
	Ambient temperatures below -25°C / -13°F may affect the readability of the display.
Operating elements	4 push buttons/optical keys for operator control of the signal converter without opening the housing.
	Infrared interface for reading and writing all parameters with IR interface (option) without opening the housing.
Remote operation	PACTware™ (incl. Device Type Manager (DTM))
	HART® Hand Held Communicator from Emerson Process
	AMS® from Emerson Process
	PDM® from Siemens
	All DTMs and drivers are available free of charge from the manufacturer's website.
Display functions	
Operating menu	Setting the parameters using 2 measuring pages, 1 status page, 1 graphic page (measured values and graphics are freely adjustable)
Language display texts (as language package)	Standard: English, French, German, Dutch, Portuguese, Swedish, Spanish, Italian
	Eastern Europe (in preparation): English, Slovenian, Czech, Hungarian
	Northern Europe: English, Danish, Polish
	Southern Europe: English, Turkish
	China (in preparation): English, Chinese
	Russia: English, Russian
Measurement functions	**Units:** Metric, British and US units selectable as desired from lists for volume/mass flow and counting, velocity, temperature, pressure
	Measured values: Mass flow, total mass, temperature, density, volume flow, total volume, velocity, flow direction (not displayed unit – but available via outputs), BRIX, Baume, NaOH, Plato, API, mass concentration, volume concentration
Diagnostic functions	**Standards:** VDI / NAMUR / WIB 2650 and NE 107
	Status messages: Output of status messages optional via display, current and/or status output, HART® or bus interface
	Sensor diagnosis: Sensor values, drive level, measuring tube frequency, 2 phase signal, drive coil impedance, insulation fault, circuit interruption, exceeding the maximum flow, process temperature
	Self-diagnosing sensor electronics: Electronics temperature, input gains, driver amplifier
	Signal converter and inputs/outputs: Data bus monitoring, current output connections, electronics temperature, voltage drop, parameter and data integrity

Measuring accuracy

Reference conditions	Medium: water
	Temperature: +20°C / +68°F
	Pressure: 1 bar / 14.5 psi
Maximum measuring error	Refer to technical data for the flow sensor.
Current output electronics	±5 µA

Operating conditions

Temperature	
Process temperature	Refer to technical data for the flow sensor.
Ambient temperature	Depending on the version and combination of outputs.
	It is a good idea to protect the signal converter from external heat sources such as direct sunlight as higher temperatures reduce the life cycle of all electronic components.
	-40...+65°C / -40...+149°F
	Stainless steel housing: -40...+60°C / -40...+140°F
	Ambient temperatures below -25°C / -13°F may affect the readability of the display.
Storage temperature	-50...+70°C / -58...+158°F
Pressure	
Medium	Refer to technical data for the flow sensor.
Ambient pressure	Atmospheric
Chemical properties	
State of aggregation	Liquids, gases and slurries
Flow rate	Refer to technical data for the flow sensor.
Other conditions	
Ingress protection acc. to IEC 529 / EN 60529	IP66/67 (acc. to NEMA 4/4X)

Installation conditions

Installation	For detailed information, refer to chapter "Installation conditions".
Dimensions and weights	For detailed information refer to chapter "Dimensions and weights".

Materials

Signal converter housing	Standard: die-cast aluminium (polyurethane coated)
	Option: stainless steel 316 (1.4408)
Flow sensor	For housing material, process connections, measuring tubes, accessories and gaskets, refer to technical data for the flow sensor.

Electrical connection

General	Electrical connection is carried out in conformity with the VDE 0100 directive "Regulations for electrical power installations with line voltages up to 1000 V" or equivalent national specifications.
Power supply	Standard: 100...230 VAC (-15% / +10%), 50/60 Hz
	Option 1: 24 VDC (-55% / +30%)
	Option 2: 24 VAC/DC (AC: -15% / +10%, 50/60 Hz; DC: -25% / +30%)
Power consumption	AC: 22 VA
	DC: 12 W
Signal cable	Only for remote versions.
	10 core shielded cable. Detailed specifications are available on request.
	Length: max. 20 m / 65.6 ft
Cable entries	Standard: M20.5 (8...12 mm)
	Option: ½ NPT, PF ½

Inputs and outputs

General	All outputs are electrically isolated from each other and from all other circuits.		
	All operating data and output values can be adjusted.		
Description of abbreviations	U_{ext} = external voltage; R_L = load + resistance; U_0 = terminal voltage; I_{nom} = nominal current Safety limit values (Ex i): U_i = max. input voltage; I_i = max. input current; P_i = max. input power rating; C_i = max. input capacity; L_i = max. input inductivity		
Current output			
Output data	Volume flow, mass flow, temperature, density, flow velocity, diagnostic value, 2-phase signal		
	Concentration and concentration flow are also possible with available concentration measurement (optional).		
Temperature coefficient	Typically ±30 ppm/K		
Settings	**Without HART®**		
	Q = 0%: 0…20 mA; Q = 100%: 10…20 mA		
	Error identification: selectable 3…22 mA		
	With HART®		
	Q = 0%: 4…20 mA; Q = 100%: 10…20 mA		
	Error identification: selectable 3…22 mA		
Operating data	**Basic I/Os**	**Modular I/Os**	**Ex i**
Active	$U_{int, nom}$ = 24 VDC I ≤ 22 mA R_L ≤ 1 kΩ		$U_{int, nom}$ = 20 VDC I ≤ 22 mA R_L ≤ 450 Ω
			U_0 = 21 V I_0 = 90 mA P_0 = 0.5 W C_0 = 90 nF / L_0 = 2 mH C_0 = 110 nF / L_0 = 0.5 mH
Passive	U_{ext} ≤ 32 VDC I ≤ 22 mA U_0 ≥ 1.8 V $R_L \leq (U_{ext} - U_0) / I_{max}$		U_{ext} ≤ 32 VDC I ≤ 22 mA U_0 ≥ 4 V $R_L \leq (U_{ext} - U_0) / I_{max}$
			U_i = 30 V I_i = 100 mA P_i = 1 W C_i = 10 nF L_i ~ 0 mH

HART®			
Description	HART® protocol via active and passive current output		
	HART® version: V7		
	Universal HART® parameter: completely integrated		
Load	≥ 250 Ω at HART® test point; Note maximum load for current output!		
Multidrop operation	Yes, current output = 10%, e.g. 4 mA		
	Multi-drop address adjustable in operation menu 0...63		
Device drivers	Available for FC 375/475, AMS, PDM, FDT/DTM		
Registration (HART Communication Foundation)	Yes		
Pulse output or frequency output			
Output data	Pulse output: volume flow, mass flow, mass or volume of dissolved substance during activated concentration measurement		
	Frequency output: flow velocity, mass flow, temperature, density, diagnostic value Optional: concentration, flow of the dissolved substance		
Function	Can be set as a pulse output or frequency output		
Pulse rate/frequency	0.01...10000 pulses/s or Hz		
Settings	Mass or volume per pulse or max. frequency for 100% flow		
	Pulse width: adjustable as automatic, symmetric or fixed (0.05...2000 ms)		
Operating data	**Basic I/Os**	**Modular I/Os**	**Ex i**
Active	-	U_{nom} = 24 VDC	-
		f_{max} in operating menu set to $f_{max} \leq 100$ Hz: I ≤ 20 mA open: I ≤ 0.05 mA closed: $U_{0, nom}$ = 24 V at I = 20 mA	
		f_{max} in operating menu set to 100 Hz < $f_{max} \leq$ 10 kHz: I ≤ 20 mA open: I ≤ 0.05 mA closed: $U_{0, nom}$ = 22.5 V at I = 1 mA $U_{0, nom}$ = 21.5 V at I = 10 mA $U_{0, nom}$ = 19 V at I = 20 mA	

Passive	$U_{ext} \leq 32$ VDC		-
	f_{max} in operating menu set to $f_{max} \leq 100$ Hz: $I \leq 100$ mA open: $I \leq 0.05$ mA at $U_{ext} = 32$ VDC closed: $U_{0, max} = 0.2$ V at $I \leq 10$ mA $U_{0, max} = 2$ V at $I \leq 100$ mA		
	f_{max} in operating menu set to 100 Hz < $f_{max} \leq 10$ kHz: $I \leq 20$ mA open: $I \leq 0.05$ mA at $U_{ext} = 32$ VDC closed: $U_{0, max} = 1.5$ V at $I \leq 1$ mA $U_{0, max} = 2.5$ V at $I \leq 10$ mA $U_{0, max} = 5.0$ V at $I \leq 20$ mA		
NAMUR	-	Passive to EN 60947-5-6 open: $I_{nom} = 0.6$ mA closed: $I_{nom} = 3.8$ mA	Passive to EN 60947-5-6 open: $I_{nom} = 0.43$ mA closed: $I_{nom} = 4.5$ mA
			$U_i = 30$ V $I_i = 100$ mA $P_i = 1$ W $C_i = 10$ nF $L_i \sim 0$ mH
Low flow cut off			
Function	Switching point and hysteresis separately adjustable for each output, counter and the display		
Switching point	Set in increments of 0.1%.		
	0…20% (current output, frequency output)		
Hysteresis	Set in increments of 0.1%.		
	0…5% (current output, frequency output)		
Time constant			
Function	The time constant corresponds to the elapsed time until 67% of the end value has been reached according to a step function.		
Settings	Set in increments of 0.1 seconds.		
	0…100 seconds		

Status output / limit switch			
Function and settings	Adjustable as automatic measuring range conversion, display of flow direction, overflow, error or switching point.		
	Valve control with activated dosing function		
	Status and/or control: ON or OFF		
Operating data	**Basic I/Os**	**Modular I/Os**	**Ex i**
Active	-	U_{int} = 24 VDC I ≤ 20 mA open: I ≤ 0.05 mA closed: $U_{0, nom}$ = 24 V at I = 20 mA	-
Passive	U_{ext} ≤ 32 VDC I ≤ 100 mA open: I ≤ 0.05 mA at U_{ext} = 32 VDC closed: $U_{0, max}$ = 0.2 V at I ≤ 10 mA $U_{0, max}$ = 2 V at I ≤ 100 mA	U_{ext} ≤ 32 VDC I ≤ 100 mA $R_{L, max}$ = 47 kΩ $R_{L, min}$ = (U_{ext} - U_0) / I_{max} open: I ≤ 0.05 mA at U_{ext} = 32 VDC closed: $U_{0, max}$ = 0.2 V at I ≤ 10 mA $U_{0, max}$ = 2 V at I ≤ 100 mA	-
NAMUR	-	Passive to EN 60947-5-6 open: I_{nom} = 0.6 mA closed: I_{nom} = 3.8 mA	Passive to EN 60947-5-6 open: I_{nom} = 0.43 mA closed: I_{nom} = 4.5 mA
			U_i = 30 V I_i = 100 mA P_i = 1 W C_i =10 nF L_i = 0 mH

Control input			
Function	Hold value of the outputs (e.g. for cleaning work), set value of the outputs to "zero", counter and error reset, stop counter, range conversion, zero calibration		
	Start of dosing when dosing function is activated.		
Operating data	**Basic I/Os**	**Modular I/Os**	**Ex i**
Active	-	U_{int} = 24 VDC Ext. contact open: $U_{0, nom}$ = 22 V Ext. contact closed: I_{nom} = 4 mA Contact open (Off): $U_0 \geq 12$ V with I_{nom} = 1.9 mA Contact closed (On): $U_0 \leq 10$ V with I_{nom} = 1.9 mA	-
Passive	8 V ≤ U_{ext} ≤ 32 VDC I_{max} = 6.5 mA at $U_{ext} \leq 24$ VDC I_{max} = 8.2 mA at $U_{ext} \leq 32$ VDC Contact closed (On): $U_0 \geq 8$ V with I_{nom} = 2.8 mA Contact open (Off): $U_0 \leq 2.5$ V with I_{nom} = 0.4 mA	3 V ≤ U_{ext} ≤ 32 VDC I_{max} = 9.5 mA at $U_{ext} \leq 24$ V I_{max} = 9.5 mA at $U_{ext} \leq 32$ V Contact closed (On): $U_0 \geq 3$ V with I_{nom} = 1.9 mA Contact open (Off): $U_0 \leq 2.5$ V with I_{nom} = 1.9 mA	$U_{ext} \leq 32$ VDC I ≤ 6 mA at U_{ext} = 24 V I ≤ 6.6 mA at U_{ext} = 32 V On: $U_0 \geq 5.5$ V or I ≥ 4 mA Off: $U_0 \leq 3.5$ V or I ≤ 0.5 mA U_i = 30 V I_i = 100 mA P_i = 1 W C_i = 10 nF L_i = 0 mH
NAMUR	-	Active to EN 60947-5-6 Terminals open: $U_{0, nom}$ = 8.7 V Contact closed (On): $U_{0, nom}$ = 6.3 V with I_{nom} > 1.9 mA Contact open (Off): $U_{0, nom}$ = 6.3 V with I_{nom} < 1.9 mA Detection of cable break: $U_0 \geq 8.1$ V with I ≤ 0.1 mA Detection of cable short circuit: $U_0 \leq 1.2$ V with I ≥ 6.7 mA	-

PROFIBUS DP	
Description	Galvanically isolated acc. to IEC 61158
	Profile version: 3.02
	Automatic data transmission rate recognition (max. 12 MBaud)
	Bus address adjustable via local display at the measuring device
Function blocks	8 x analogue input, 3 x totaliser
Output data	Mass flow, volume flow, mass counter 1 + 2, volume counter, product temperature, several concentration measurements and diagnostic data
PROFIBUS PA	
Description	Galvanically isolated acc. to IEC 61158
	Profile version: 3.02
	Current consumption: 10.5 mA
	Permissible bus voltage: 9…32 V; in Ex application: 9...24 V
	Bus interface with integrated reverse polarity protection
	Typical error current FDE (Fault Disconnection Electronic): 4.3 mA
	Bus address adjustable via local display at the measuring device
Function blocks	8 x analogue input, 3 x totaliser
Output data	Mass flow, volume flow, mass counter 1 + 2, volume counter, product temperature, several concentration measurements and diagnostic data
FOUNDATION Fieldbus	
Description	Galvanically isolated acc. to IEC 61158
	Current consumption: 10.5 mA
	Permissible bus voltage: 9…32 V; in Ex application: 9...24 V
	Bus interface with integrated reverse polarity protection
	Link Master function (LM) supported
	Tested with Interoperable Test Kit (ITK) version 6.01
Function blocks	6 x analogue input, 2 x integrator, 1 x PID
Output data	Mass flow, volume flow, density, temperature of tube, several concentration measurements and diagnostic data
Modbus	
Description	Modbus RTU, Master/Slave, RS485
Address range	1…247
Supported function codes	01, 03, 04, 05, 08, 16, 43
Supported Baudrate	1200, 2400, 3600, 4800, 9600, 19200, 38400, 57600, 115200 Baud

Approvals and certificates

CE	The device fulfils the statutory requirements of the EC directives. The manufacturer certifies that these requirements have been met by applying the CE marking.
Non-Ex	Standard
Hazardous areas	
Option (C version only)	
ATEX	II 1/2 (1) G - Ex d ia [ia Ga] IIC T6...T1 Ga/Gb
	II 1/2 (1) G - Ex de ia [ia Ga] IIC T6...T1 Ga/Gb
	II 2 (1) G - Ex d ia [ia Ga] IIC T6...T1 Gb
	II 2 (1) G - Ex de ia [ia Ga] IIC T6...T1 Gb
	II 2 (1) D - Ex t [ia Da] IIIC Txxx°C Db
	II 1/2 G - Ex d ia IIC T6...T1 Ga/Gb; II 1/2 G - Ex de ia IIC T6...T1 Ga/Gb
	II 2 G - Ex d ia IIC T6...T1 Gb; II 2 G - Ex de ia IIC T6...T1 Gb
	II 2 D - Ex t IIIC Txxx°C Db
Option (F version only)	
ATEX	II 2 (1) G - Ex d [ia Ga] IIC T6 Gb
	II 2 (1) G - Ex de [ia Ga] IIC T6 Gb
	II 2 (1) D - Ex t [ia Da] IIIC T75°C Db
	II 2 G - Ex d [ia] IIC T6 Gb; II 2 G - Ex de [ia] IIC T6 Gb
	II 2 D - Ex t IIIC T75°C Db
NEPSI	Ex d ia [ia Ga] IIC T6...T1 Ga/Gb; Ex de ia [ia Ga] IIC T6...T1 Ga/Gb
Option	
FM / CSA	FM: Class I, Div 1 groups A, B, C, D CSA: Class I, Div 1 groups C, D
	Class II, Div 1 groups E, F, G
	Class III, Div 1 hazardous areas
	FM: Class I, Div 2 groups A, B, C, D CSA: Class I, Div 2 groups C, D
	Class II, Div 2 groups E, F, G
	Class III, Div 2 hazardous areas
IECEx	Ex zone 1 + 2
Custody transfer	
Without	Standard
Option	Liquids other than water 2004/22/EC (MID MI005) acc. to OIML R 117-1
	Gases 2004/22/EC (MID MI002) acc. to OIML R 137
Other standards and approvals	
Shock and vibration resistance	IEC 68-2-3
Electromagnetic compatibility (EMC)	2004/108/EC in conjunction with EN 61326-1 (A1, A2)
European pressure equipment directive	PED 97/23/EC
NAMUR	NE 21, NE 43, NE 53, NE 107

2.2 Dimensions and weights

2.2.1 Housing

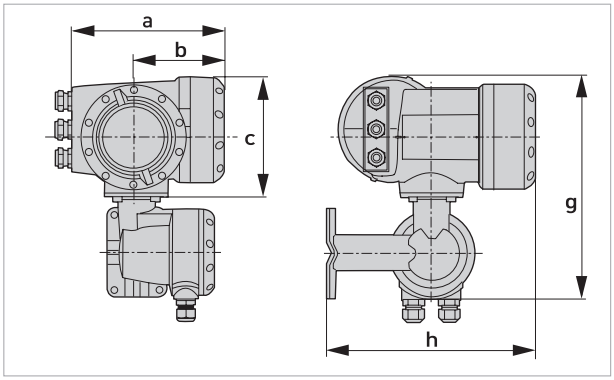

Figure 2-1: Dimensions for field housing (F) - remote version

Dimensions [mm / inch]					Weight [kg / lb]
a	b	c	g	h	
202 / 7.75	120 / 4.75	155 / 6.10	295.8 / 11.60	277 / 10.90	5.7 / 12.60

2.2.2 Mounting plate, field housing

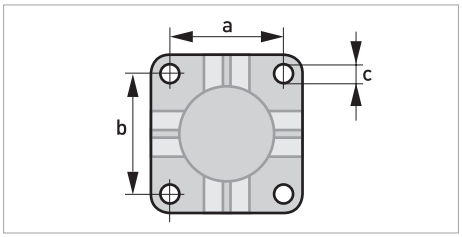

Dimensions in mm and inch

	[mm]	[inch]
a	72	2.8
b	72	2.8
c	Ø9	Ø0.4

3.1 Intended use

The mass flowmeters are designed exclusively to directly measure mass flow rates, product density and temperature as well to indirectly measure parameters such as the total volume and concentration of dissolved substances as well as the volume flow rate.

For devices used in hazardous areas, additional safety notes apply; please refer to the Ex documentation.

If the device is not used according to the operating conditions (refer to chapter Technical data), the intended protection could be affected.

3.2 Installation specifications

The following precautions must be taken to ensure reliable installation.

- *Make sure that there is adequate space to the sides.*
- *Protect the signal converter from direct sunlight and install a sun shade if necessary.*
- *Signal converters installed in control cabinets require adequate cooling, e.g. by fan or heat exchanger.*
- *Do not expose the signal converter to intense vibrations. The measuring devices are tested for a vibration level in accordance with IEC 68-2-64.*

3.3 Mounting of the compact version

The signal converter is mounted directly on the flow sensor. For installation of the flowmeter, please observe the instructions in the supplied product documentation for the flow sensor.

3.4 Mounting the field housing, remote version

Remarks for sanitary applications

- *To prevent contamination and dirt deposits behind the mounting plate, a cover plug must be installed between the wall and the mounting plate.*
- *Pipe mounting is not suitable for sanitary applications!*

Assembly materials and tools are not part of the delivery. Use the assembly materials and tools in compliance with the applicable occupational health and safety directives.

3.4.1 Pipe mounting

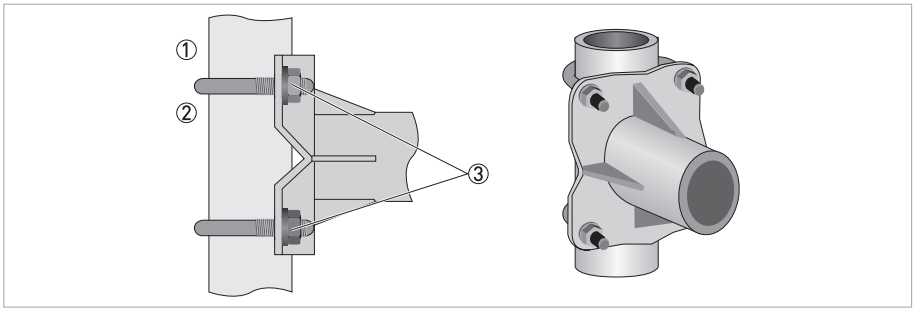

Figure 3-1: Pipe mounting of the field housing

① Fix the signal converter to the pipe.
② Fasten the signal converter using standard U-bolts and washers.
③ Tighten the nuts.

3.4.2 Wall mounting

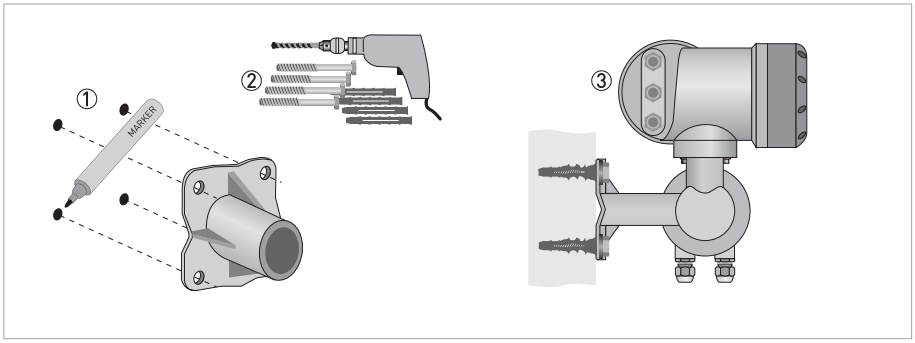

Figure 3-2: Wall mounting of the field housing

① Prepare the holes with the aid of the mounting plate. For further information refer to *Mounting plate, field housing* on page 18.
② Fasten the mounting plate securely to the wall.
③ Screw the signal converter to the mounting plate with the nuts and washers.

Mounting multiple devices next to each other

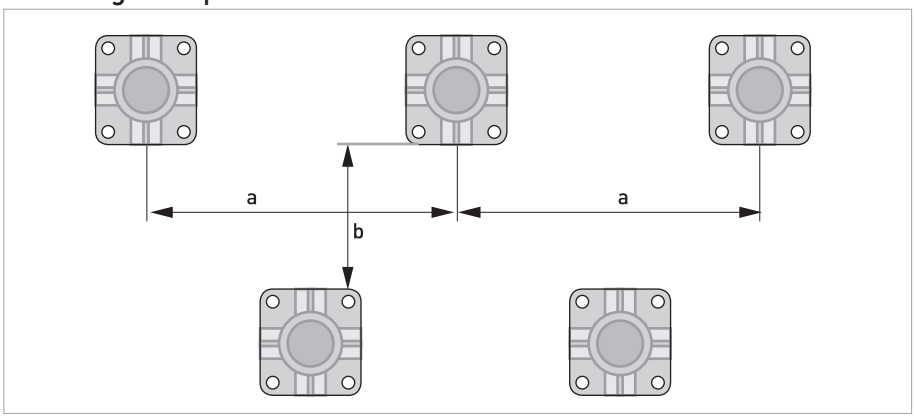

a ≥ 600 mm / 23.6"
b ≥ 250 mm / 9.8"

4.1 Safety instructions

All work on the electrical connections may only be carried out with the power disconnected. Take note of the voltage data on the nameplate!

Observe the national regulations for electrical installations!

For devices used in hazardous areas, additional safety notes apply; please refer to the Ex documentation.

Observe without fail the local occupational health and safety regulations. Any work done on the electrical components of the measuring device may only be carried out by properly trained specialists.

Look at the device nameplate to ensure that the device is delivered according to your order. Check for the correct supply voltage printed on the nameplate.

4.2 Connection diagram

The device must be grounded in accordance with regulations in order to protect personnel against electric shocks.

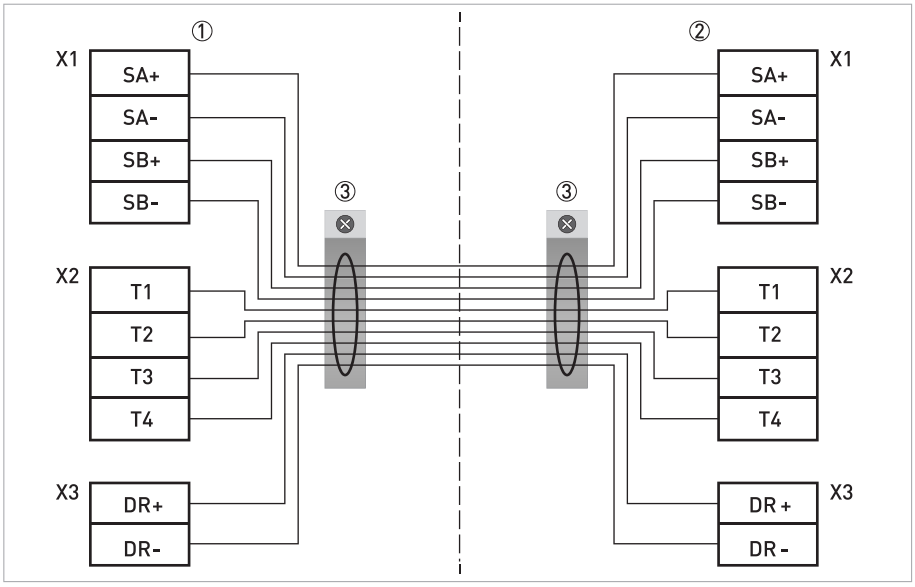

Figure 4-1: Connection diagram

① Terminal compartment for signal converter
② Terminal compartment for measuring sensor
③ Connect shielding to spring terminal (drain wire and overall shield)

Cable	Cable	Connection terminal
Cable pair	Colour	
1	yellow	X1 SA+
1	black	X1 SA-
2	green	X1 SB+
2	black	X1 SB-
3	blue	X2 T1
3	black	X2 T2
4	red	X2 T3
4	black	X2 T4
5	white	X3 DR+
5	black	X3 DR-

4.3 Grounding the flow sensor

There should be no difference in potential between the flow sensor and the housing or protective earth of the signal converter!

- The flow sensor must be properly grounded.
- The grounding cable should not transmit any interference voltages.
- Do not use the grounding cable to connect more than one device to ground.
- The flow sensors are connected to ground by means of a functional grounding conductor FE.
- In hazardous areas, grounding is used at the same time for equipotential bonding. Additional grounding instructions are provided in the supplementary "Ex documentation", which are only supplied together with hazardous area equipment.

4.4 Connecting power – all housing variants

The device must be grounded in accordance with regulations in order to protect personnel against electric shocks.

For devices used in hazardous areas, additional safety notes apply; please refer to the Ex documentation.

- The protection category depends on the housing versions (IP65...67 to IEC 529 / EN 60529 or NEMA4/4X/6).
- The housings of the devices, which are designed to protect the electronic equipment from dust and moisture, should be kept well closed at all times. Creepage distances and clearances are dimensioned to VDE 0110 and IEC 664 for pollution severity 2. Supply circuits are designed for overvoltage category III and the output circuits for overvoltage category II.
- Fuse protection ($I_N \leq 16$ A) for the infeed power circuit, as well as a separator (switch, circuit breaker) to isolate the signal converter must be provided close to the device. The separator must be marked as the separator for this device.

100...230 VAC (tolerance range: -15% / +10%)

- Note the power supply voltage and frequency (50...60 Hz) on the nameplate.
- The protective ground terminal **PE** of the power supply must be connected to the separate U-clamp terminal in the terminal compartment of the signal converter

240 VAC + 5% is included in the tolerance range.

24 VDC (tolerance range: -55% / +30%)
24 VAC/DC (tolerance range: AC: -15% / +10%; DC: -25% / +30%)

- Note the data on the nameplate!
- For measurement process reasons, a functional ground **FE** must be connected to the separate U-clamp terminal in the terminal compartment of the signal converter.
- When connecting to functional extra-low voltages, provide a facility for protective separation (PELV) (acc. to VDE 0100 / VDE 0106 and/or IEC 364 / IEC 536 or relevant national regulations).

For 24 VDC, 12 VDC - 10% is included in the tolerance range.

Power supply connection

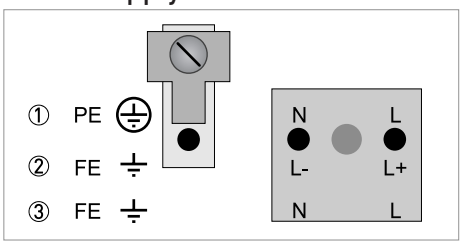

① 100...230 VAC (-15% / +10%), 22 VA
② 24 VDC (-55% / +30%), 12 W
③ 24 VAC/DC (AC: -15% / +10%; DC: -25% / +30%), 22 VA or 12 W

4.5 Inputs and outputs, overview

4.5.1 Combinations of the inputs/outputs (I/Os)

This signal converter is available with various input/output combinations.

Basic version

- Has 1 current output, 1 pulse output and 2 status outputs / limit switches.
- The pulse output can be set as status output/limit switch and one of the status outputs as a control input.

Ex i version

- Depending on the task, the device can be configured with various output modules.
- Current outputs can be active or passive.
- Optionally available also with Foundation Fieldbus and Profibus PA

Modular version

- Depending on the task, the device can be configured with various output modules.

Bus systems

- The device allows intrinsically safe and non intrinsically safe bus interfaces in combination with additional modules.
- For connection and operation of bus systems, note the supplementary instructions.

Ex option

- For hazardous areas, all of the input/output variants for the housing designs C and F can be delivered with terminal compartment in Ex d (pressure-resistant casing) or Ex e (increased safety).
- For connection and operation of Ex devices, note the supplementary instructions.

4.5.2 Description of the CG number

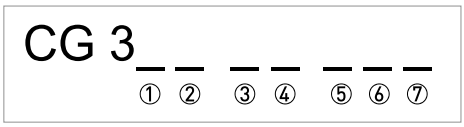

Figure 4-2: Marking (CG number) of the electronics module and input/output variants

① ID number: 3
② ID number: 0 = standard; 9 = special
③ Power supply option
④ Display (language versions)
⑤ Input/output version (I/O)
⑥ 1st optional module for connection terminal A
⑦ 2nd optional module for connection terminal B

The last 3 digits of the CG number (⑤, ⑥ and ⑦) indicate the assignment of the terminal connections. Please refer to the following examples.

Examples for CG number

CG 330 11 100	100...230 VAC & standard display; basic I/O: I_a or I_p & S_p/C_p & S_p & P_p/S_p
CG 330 11 7FK	100...230 VAC & standard display; modular I/O: I_a & P_N/S_N and optional module P_N/S_N & C_N
CG 330 81 4EB	24 VDC & standard display; modular I/O: I_a & P_a/S_a and optional module P_p/S_p & I_p

Description of abbreviations and CG identifier for possible optional modules on terminals A and B

Abbreviation	Identifier for CG No.	Description
I_a	A	Active current output
I_p	B	Passive current output
P_a / S_a	C	Active pulse output, frequency output, status output or limit switch (changeable)
P_p / S_p	E	Passive pulse output, frequency output, status output or limit switch (changeable)
P_N / S_N	F	Passive pulse output, frequency output, status output or limit switch acc. to NAMUR (changeable)
C_a	G	Active control input
C_p	K	Passive control input
C_N	H	Active control input to NAMUR Signal converter monitors cable breaks and short circuits acc. to EN 60947-5-6. Errors indicated on LC display. Error messages possible via status output.
-	8	No additional module installed
-	0	No further module possible

4.5.3 Fixed, non-alterable input/output versions

This signal converter is available with various input/output combinations.

- The grey boxes in the tables denote unassigned or unused connection terminals.
- In the table, only the final digits of the CG no. are depicted.
- Connection terminal A+ is only operable in the basic input/output version.

CG no.	Connection terminals								
	A+	A	A-	B	B-	C	C-	D	D-

Basic I/Os (standard)

1 0 0		I_p + HART® passive ①		S_p / C_p passive ②		S_p passive		P_p / S_p passive ②	
	I_a + HART® active ①								

Ex i I/Os (option)

2 0 0						I_a + HART® active		P_N / S_N NAMUR ②	
3 0 0						I_p + HART® passive		P_N / S_N NAMUR ②	
2 1 0		I_a active		P_N / S_N NAMUR C_p passive ②		I_a + HART® active		P_N / S_N NAMUR ②	
3 1 0		I_a active		P_N / S_N NAMUR C_p passive ②		I_p + HART® passive		P_N / S_N NAMUR ②	
2 2 0		I_p passive		P_N / S_N NAMUR C_p passive ②		I_a + HART® active		P_N / S_N NAMUR ②	
3 2 0		I_p passive		P_N / S_N NAMUR C_p passive ②		I_p + HART® passive		P_N / S_N NAMUR ②	

PROFIBUS PA (Ex i) (option)

D 0 0					PA+	PA-	PA+	PA-	
					FISCO Device		FISCO Device		
D 1 0		I_a active		P_N / S_N NAMUR C_p passive ②	PA+	PA-	PA+	PA-	
					FISCO Device		FISCO Device		
D 2 0		I_p passive		P_N / S_N NAMUR C_p passive ②	PA+	PA-	PA+	PA-	
					FISCO Device		FISCO Device		

FOUNDATION Fieldbus (Ex i) (option)

E 0 0				V/D+	V/D-	V/D+	V/D-
				FISCO Device		FISCO Device	
E 1 0		I_a active	P_N / S_N NAMUR C_p passive ②	V/D+	V/D-	V/D+	V/D-
				FISCO Device		FISCO Device	
E 2 0		I_p passive	P_N / S_N NAMUR C_p passive ②	V/D+	V/D-	V/D+	V/D-
				FISCO Device		FISCO Device	

① Function changed by reconnecting
② Changeable

4.5.4 Alterable input/output versions

This signal converter is available with various input/output combinations.

- The grey boxes in the tables denote unassigned or unused connection terminals.
- In the table, only the final digits of the CG no. are depicted.
- Term. = (connection) terminal

CG no.	Connection terminals								
	A+	A	A-	B	B-	C	C-	D	D-
Modular I/Os (option)									
4 _ _		max. 2 optional modules for term. A + B				I_a + HART® active		P_a / S_a active ①	
8 _ _		max. 2 optional modules for term. A + B				I_p + HART® passive		P_a / S_a active ①	
6 _ _		max. 2 optional modules for term. A + B				I_a + HART® active		P_p / S_p passive ①	
B _ _		max. 2 optional modules for term. A + B				I_p + HART® passive		P_p / S_p passive ①	
7 _ _		max. 2 optional modules for term. A + B				I_a + HART® active		P_N / S_N NAMUR ①	
C _ _		max. 2 optional modules for term. A + B				I_p + HART® passive		P_N / S_N NAMUR ①	
PROFIBUS PA (option)									
D _ _		max. 2 optional modules for term. A + B				PA+ (2)	PA- (2)	PA+ (1)	PA- (1)
FOUNDATION Fieldbus (option)									
E _ _		max. 2 optional modules for term. A + B				V/D+ (2)	V/D- (2)	V/D+ (1)	V/D- (1)
PROFIBUS DP (option)									
F _ 0		1 optional module for term. A		Termination P	RxD/TxD-P(2)	RxD/TxD-N(2)	Termination N	RxD/TxD-P(1)	RxD/TxD-N(1)
Modbus (option)									
G _ _ ②		max. 2 optional modules for term. A + B					Common	Sign. B (D1)	Sign. A (D0)
H _ _ ③		max. 2 optional modules for term. A + B					Common	Sign. B (D1)	Sign. A (D0)

① Changeable
② Not activated bus terminator
③ Activated bus terminator

KROHNE – Process instrumentation and measurement solutions

- Flow
- Level
- Temperature
- Pressure
- Process Analysis
- Services

Head Office KROHNE Messtechnik GmbH
Ludwig-Krohne-Str. 5
47058 Duisburg (Germany)
Tel.: +49 203 301 0
Fax: +49 203 301 10389
info@krohne.com

The current list of all KROHNE contacts and addresses can be found at:
www.krohne.com

KROHNE

© KROHNE 06/2015 - 4002075704 - TD MFC 400 R04 en - Subject to change without notice.