▪ Globe valves ▪ Shut-off check valve ▪ 200 AE/BE ▪ PN 10-160 ▪ DN 10-50
▪ Globe valves ▪ Lift check valve ▪ 240 MT ▪ PN 10-160 ▪ DN 10-50

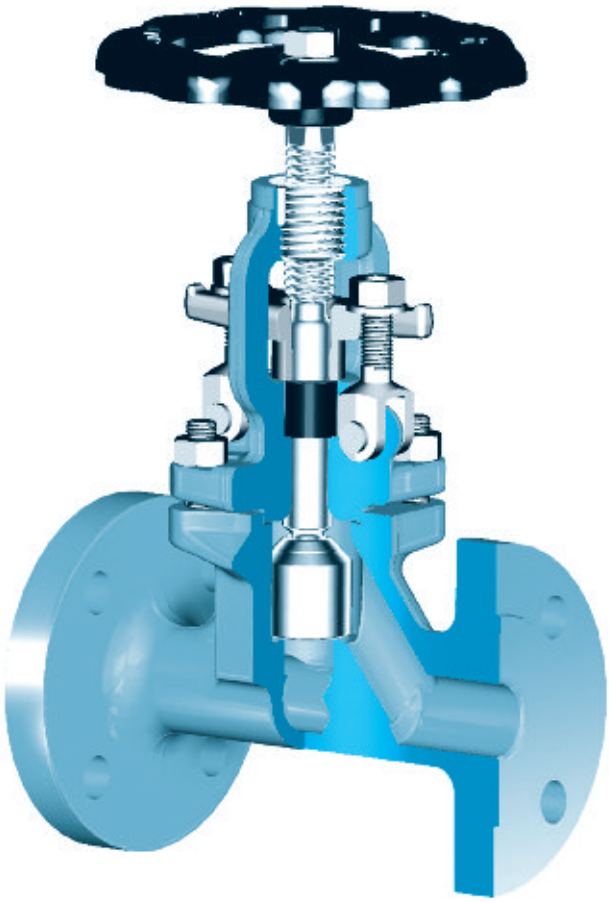

Range of application

Admissible operating pressure [bar] at design temperature [°C] 1)

Material	PN	-200	-60	-10	20	120	150	200	250	300	350	400	450	500	510	520	530	540	550
1.0460	**10-40**			40	40	40	37	35	32	28	24	21	10						
	63			63	63	63	58	50	45	40	36	32	24						
	100			100	100	100	90	80	70	60	56	50	38						
	160			160	160	160	145	130	112	96	90	80	60						
1.5415 5)	**10-40**			40	40	40	40	40	40	35	31	30	28	18	14	11	9		
	63			63	63	63	63	63	63	56	50	47	45	29	22	16	14		
	100			100	100	100	100	100	100	87	78	74	70	45	34	27	22		
	160			160	160	160	160	160	160	139	125	118	112	72	55	43	35		
1.7335	**10-40**			40	40	40	40	40	40	40	38	36	34	29	24	19	15	12	9
	63			63	63	63	63	63	63	63	61	58	56	47	40	32	25	20	15
	100			100	100	100	100	100	100	100	95	91	87	74	62	49	38	31	24
	160			160	160	160	160	160	160	160	153	146	139	118	100	79	62	46	35
1.4571	**10-40 2)3)4)**	40	40	40	40	40	40	40	40	38	36	34	32	32	32	31	31	31	31
	63 2)3)4)	63	63	63	63	63	59	56	53	50	48	47							
	100 2)3)4)	100	100	100	100	100	92	88	83	79	76	73							
	160 2)3)4)	160	160	160	160	160	150	142	135	127	123	119							
1.0566	**10-40 4)**		40	40	40	40	37	35	32	28									
	63 4)		63	63	63	63	58	50	45	40									
	100 4)		100	100	100	100	92	80	70	60									
	160 4)		160	160	160	160	147	130	112	96									

1) Operating temperature = design temperature minus temperature surcharge acc. to DIN regulations.
2) Application at more than 400° C operating temperature only admissible if no intercrystalline corrosion has to be expected.
3) At operating temperature 400° C the material of the screws is 1.4986.
4) In case of screws A4-70 with > 8 x d screw-length the mechanical strength properties acc. to table 6 of DIN 267 Part 11 have been considered.
5) Butt welding ends

Technical alterations reserved

▪ Globe valves ▪ Shut-off check valve ▪ 200 AE/BE ▪ PN 10-160 ▪ DN 10-50
▪ Globe valves ▪ Lift check valve ▪ 240 MT ▪ PN 10-160 ▪ DN 10-50

Standard features

- Straight bonnet
- Die-forged valve body and bonnet
- Shut-off disc, Fig. No. 200 AE
- Throttle disc, Fig. No. 200 BE
- Turning and rising stem with outside screw
- Position indicator if required

Pressure and temperature ratings

- Pressure rating BW-Ends up to 160 bar
- Pressure rating FL up to 160 bar
- Temperature rating up to +550° C

Materials

- 1.0460
- 1.0566
- 1.5415 only with BW-Ends
- 1.7335
- 1.4571

Further materials on request

Media

Depending on the material the globe valves are suitable for water, gas, oil and other non aggressive media

Fields of application

Chemical industries, power plants, ship building and other

Design Highlights

- Die-forged valve body and bonnet
- Seats are hardfaced or welded on
- Body-bonnet connection male and female
- Body and bonnet in two separate pieces with bolted connection

Benefits

- Free from porosity and shrink holes
- Extremely resistant to wear
- Sealing blow out proof
- To ease maintenance work, e.g. regrinding of the body seats

- **Globe valves** ▪ **Shut-off check valve** ▪ **200 AE/BE** ▪ **PN 10-160** ▪ **DN 10-50**
- **Globe valves** ▪ **Lift check valve** ▪ **240 MT** ▪ **PN 10-160** ▪ **DN 10-50**

Shut-off check valve

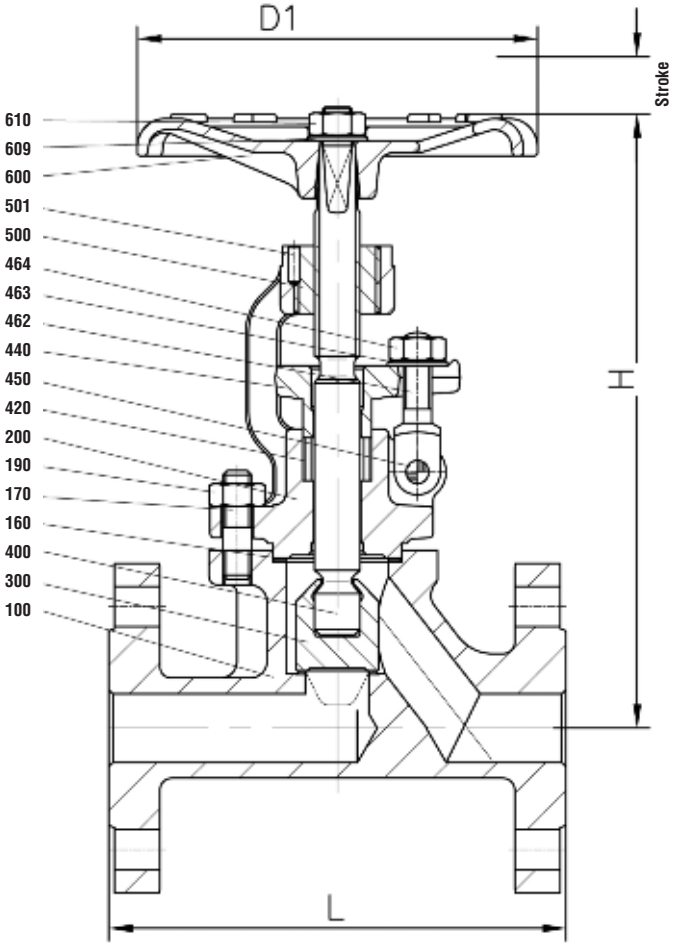

Lift check valve

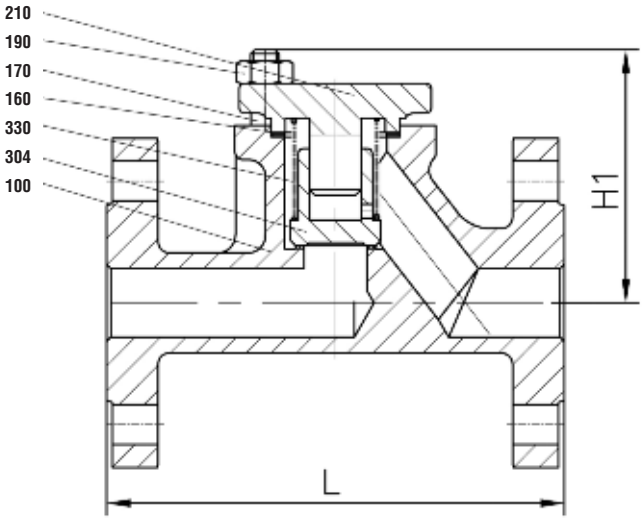

BW-Version

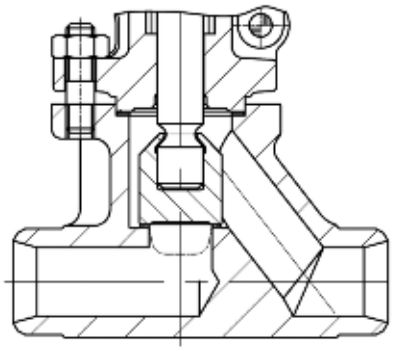

▪ Globe valves ▪ Shut-off check valve ▪ 200 AE/BE ▪ PN 10-160 ▪ DN 10-50
▪ Globe valves ▪ Lift check valve ▪ 240 MT ▪ PN 10-160 ▪ DN 10-50

Materials

Pos.	Component	1.0460 (21) [9]	1.0566 (25)	1.5415 (42) BW-Version	1.7335 (44)	1.4571 (82)	1.4571 (87)
100	Body	1.0460 [4][8]	1.0566 [4]	1.5415 [5]	1.7335 [5]	1.4571 [7]	1.4571 [7]
160	▸ Gasket	Graphite	Graphite	Graphite	Graphite	Teflon	Graphite
170	Stud [1]	1.1181	A4-70	1.7709	1.7709	A4-70	A4-70
170	Stud [2]	1.7709	A4-70	1.4923	1.4923	A4-70	A4-70
190	Hexagonal nut [1]	1.1181	A4-70	1.7258	1.7258	A4-70	A4-70
190	Hexagonal nut [2]	1.7258	A4-70	1.7258	1.7258	A4-70	A4-70
200	Bonnet	1.0460	1.0566	1.7335	1.7335	1.4571	1.4571
210	Bonnet	1.0460	1.0566	1.7335	1.7335	1.4571	1.4571
300	▸ Disc	1.4021 [3]	1.0566 [4]	1.7335 [5]	1.7335 [5]	1.4571 [6]	1.4571 [6]
304	▸ Disc	1.4021 [3]	1.4571 [6]	1.4571 [5]	1.4571 [5]	1.4571 [6]	1.4571 [6]
330	▸ Spring	1.4310	1.4310	1.4310	1.4310	1.4571	1.4571
400	▸ Stem	1.4021	1.4571	1.4021	1.4021	1.4571	1.4571
420	▸ Packing	Graphite	Graphite	Graphite	Graphite	Teflon	Graphite
440	Gland flange	1.0460	1.4571	1.0460	1.0460	1.4571	1.4571
450	Rivet	1.1181	A4-50	1.1181	1.1181	A4-50	A4-50
462	Gland bolt	1.1181	1.4571	1.1181	1.1181	1.4571	1.4571
463	Washer	St	A4-50	St	St	A4-50	A4-50
464	Hexagonal nut	1.1181	A4-70	1.1181	1.1181	A4-70	A4-70
500	▸ Stem nut	1.0718	1.0718	1.0718	1.0718	1.0718	1.0718
501	▸ Cylindrical Pin	St	St	St	St	St	St
600	Handwheel	0.7040	0.7040	0.7040	0.7040	0.7040	0.7040
609	Washer	St	St	St	St	A4-50	A4-50
610	Hexagonal nut	1.1181	1.1181	1.1181	1.1181	A4-70	A4-70

▸ Spare parts
Special materials on request; alterations reserved. Attention: Globe valves with butt weld ends also available in 15Mo3.

1) PN 10-40
2) PN 63-160
3) Seat hard faced
4) Seat hard faced with Cr17
5) Seat hard faced with stellite
6) ≥ PN 63 seat hard faced with stellite
7) ≥ PN 63 seat hard faced with hastelloy
8) DN 50 PN 63-160 material 1.0619 hard faced with Cr17
9) DN 50 PN 10-40 Flange Version with 1.0619 hard faced with Cr 17

Dimensions/mm

PN	DN	Flange L	BW-Ends L	H	Stroke	H1	D1	1.0619 H
10-40	10	130	130	215	12	85	140	
	15	130	130	215	12	85	140	
	20	120	130	220	12	90	140	
	25	160	130	220	12	90	140	
	32	180	160	245	15	115	180	
	40	200	180	250	15	130	180	
	50	230	210	260	18	120	180	
63-160	10	210	150	220	12	100	180	
	15	210	150	220	12	100	180	
	20	230	150	220	12	100	180	
	25	230	160	220	12	100	180	
	32	260	180	285	15	140	225	
	40	260	210	285	15	140	225	
63-100	50	300	250	285	18	120	225	260
160	50	300	250	285	18	120	225	260

The valves are also available in angle pattern up DN 100.

Weights/kg

PN	DN	200 AE/BE Flange	200 AE/BE BW-Ends	240 MT Flange	240 MT BW-Ends
10-40	10	4,5	3,8	3,2	2,4
	15	5,0	4,2	3,2	2,4
	20	5,7	3,8	3,9	2,4
	25	6,3	4,0	4,7	2,3
	32	10,0	7,3	7,9	5,5
	40	11,2	7,3	9,1	5,5
	50	15,5	11,0	12,1	7,9
63-160	10	8,7	5,9	6,0	4,0
	15	8,6	6,2	6,8	4,0
	20	10,4	5,5	9,0	4,0
	25	10,9	5,8	9,2	4,0
	32	19,0	13,2	15,6	9,0
	40	21,0	12,8	16,8	9,0
63-100	50	24,1	15,0	19,5	11,0
160	50	25,0	15,0	22,0	11,0

Kvs-values (m3/h)

Line	PN 10-40 DN 10	DN 15	DN 20	DN 25	DN 32	DN 40	DN 50	PN 63-160 DN 10	DN 15	DN 20	DN 25	DN 32	DN 40	DN 50
200 AE (BW)	3,0	4,5	6,2	8,6	16,0	21,0	30,0	3,0	4,5	6,2	8,6	16,0	21,0	30,0
200 AE (FL)	1,8	3,0	5,3	8,6	13,0	21,0	37,2	1,8	4,5	5,3	8,6	13,0	21,0	37,2
200 BE (BW)	2,8	4,2	5,9	7,6	14,5	19,5	26,9	2,8	4,2	5,9	7,6	14,5	19,5	26,9
200 BE (FL)	1,5	2,8	4,9	7,6	11,2	19,5	34,5	2,8	4,2	5,9	7,6	14,5	19,5	34,5
240 MT (BW)	2,7	4,1	5,7	7,9	14,6	19,2	34,0	2,7	4,1	5,7	7,9	14,6	19,2	34,0
240 MT (FL)	1,7	2,7	5,7	7,9	11,9	19,2	25,8	1,7	2,7	5,7	7,9	11,9	19,2	25,8